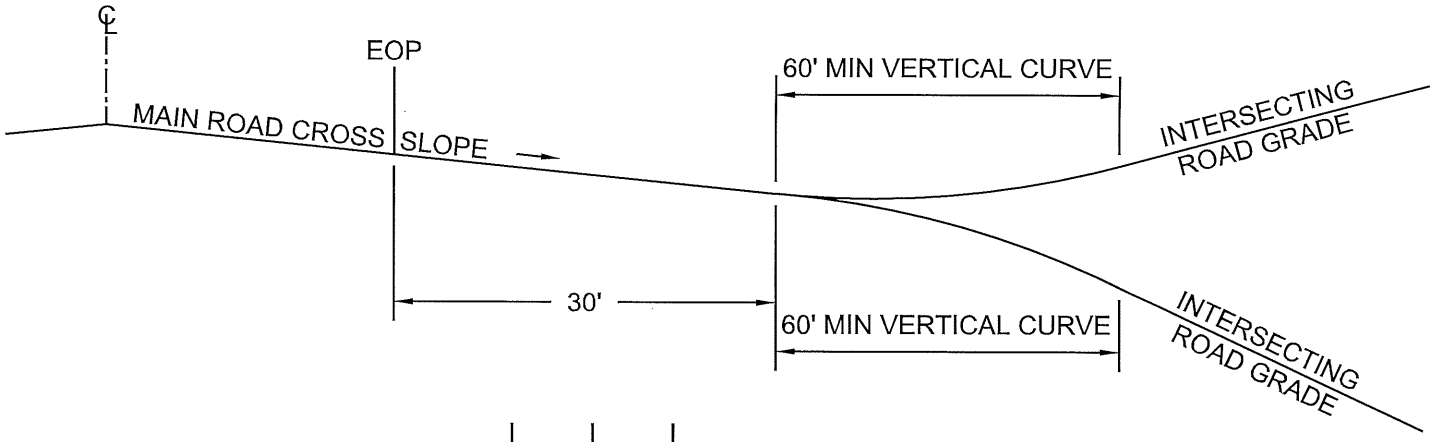

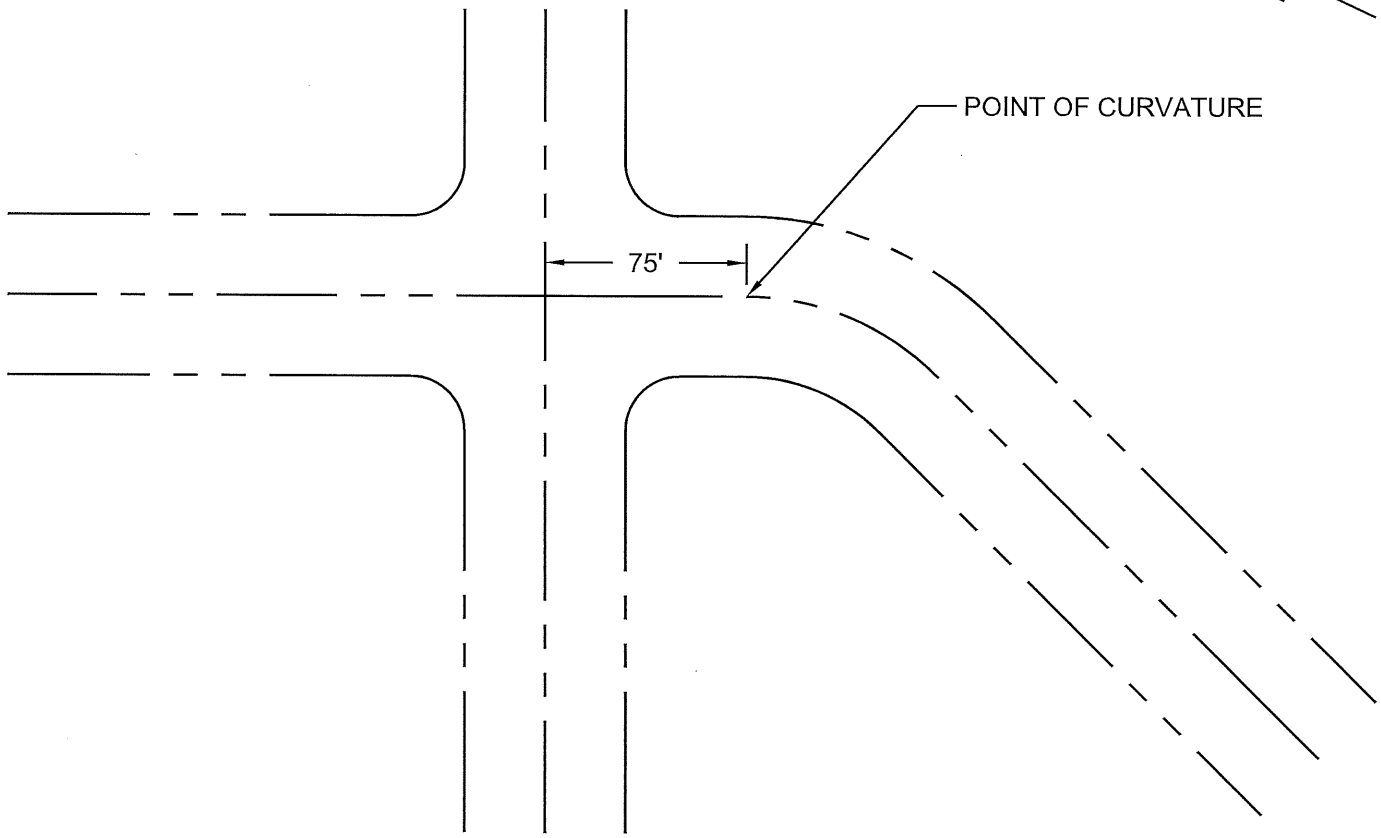

NOTES:

1. AVOID INTERSECTIONS IN AREAS WHERE MAIN ROAD IS SUPERELEVATED.
2. INTERSECTION SHALL HAVE NO MORE THEN FOUR LEGS.
3. STOPPING SIGHT DISTANCE SHALL BE MET FOR ALL LEGS APPROACHING THE INTERSECTION.
4. LIMIT ANGLE BETWEEN LEGS TO A MINIMUM OF 75°.
5. OFFSET INTERSECTION MINIMUM 300' APART.
6. SIGHT TRIANGLES SHALL BE MAINTAINED FOR ALL LEGS OF THE INTERSECTION. THIS MAY INCLUDE ADDITIONAL GRADING, CLEARING AND/OR THE DEDICATION OF RIGHT OF WAY OR EASEMENTS.

BENTON COUNTY ROAD DEPARTMENT

INTERSECTION PLAN

APPROVED BY:

COUNTY ENGINEER

8-18-2015
DATE

STANDARD PLAN

R-12

SHEET 1 OF 1