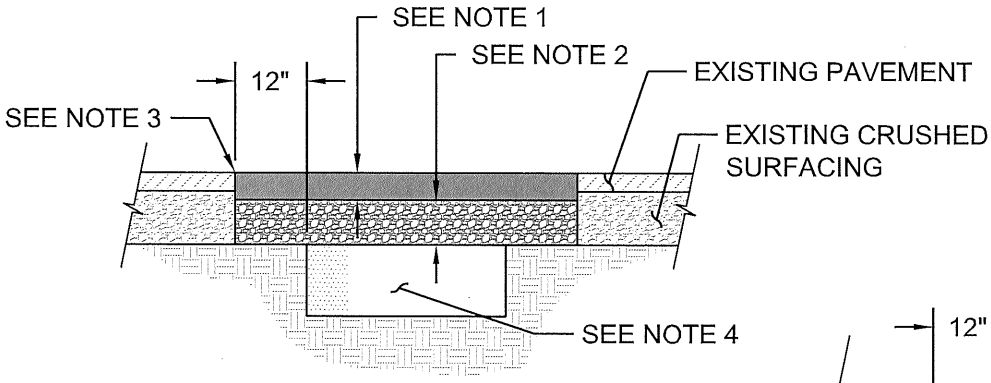

ASPHALT SURFACING

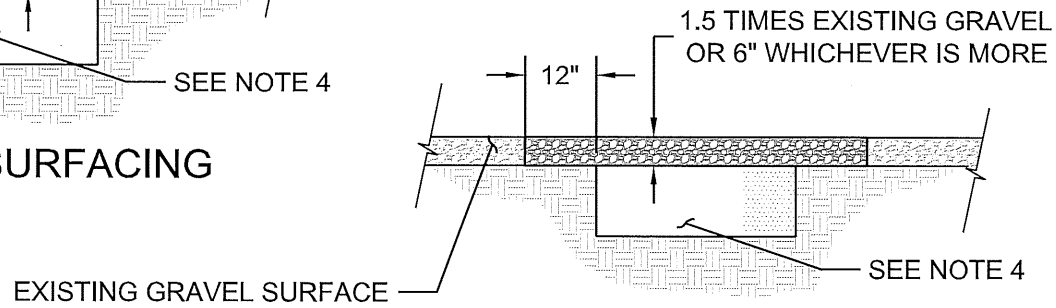

GRAVEL SURFACING

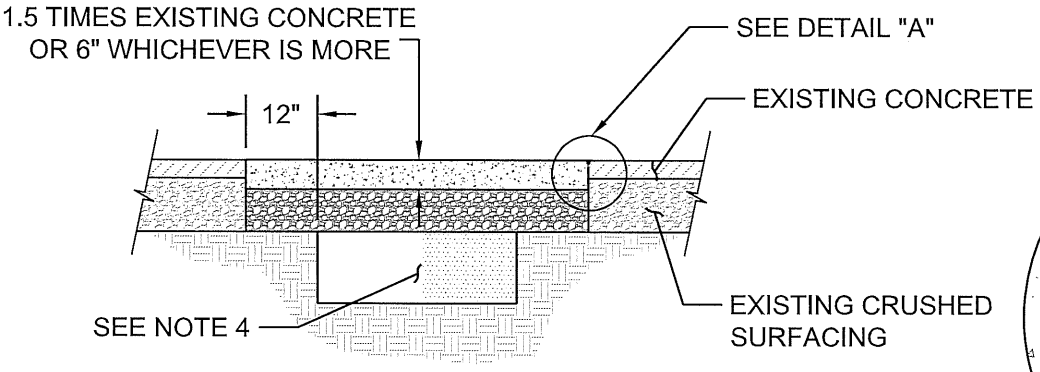

CONCRETE SURFACING

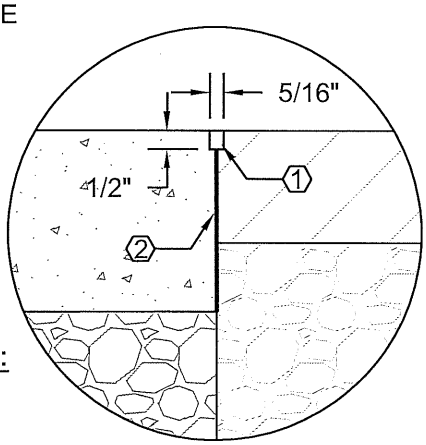

DETAIL "A"

CONSTRUCTION NOTES:

1. POLYURETHANE JOINT SEALANT PER SECTION 9-04.2(3)
2. 30 LB ROOFING FELT

NOTES:

1. HOT MIX ASPHALT CLASS 1/2 INCH PG 70-28 SHALL BE 1.5 TIMES EXISTING PAVEMENT THICKNESS OR 2 INCHES, WHICHEVER IS MORE. PLACE IN ACCORDANCE WITH SECTION 5-04.3(5)E OF THE STANDARD SPECIFICATIONS.
2. 5/8" MINUS CRUSHED SURFACING TO MATCH EXISTING CRUSHED SURFACING THICKNESS OR 6 INCHES, WHICHEVER IS MORE. COMPACT TO 95% OF MAXIMUM DENSITY PER ASTM D1557.
3. SAW CUT CLEAN, STRAIGHT EDGES ON BOTH SIDES OF TRENCH 12 INCHES BACK FROM TOP OF EXCAVATION. COAT ALL CUT EDGES WITH ASPHALT FOR TACK COAT PRIOR TO PAVING.
4. OVER EXCAVATE 12 INCHES OF EXISTING SUBGRADE. REMOVE UNSUITABLE SOIL AND DELETERIOUS MATERIALS IF ENCOUNTERED. BACKFILL AND COMPACT TO 95% MAX. DENSITY PER ASTM D1557

BENTON COUNTY ROAD DEPARTMENT

SURFACE REPAIR

APPROVED BY:

COUNTY ENGINEER

8-18-2015
DATE

STANDARD PLAN

R-9

SHEET 1 OF 1