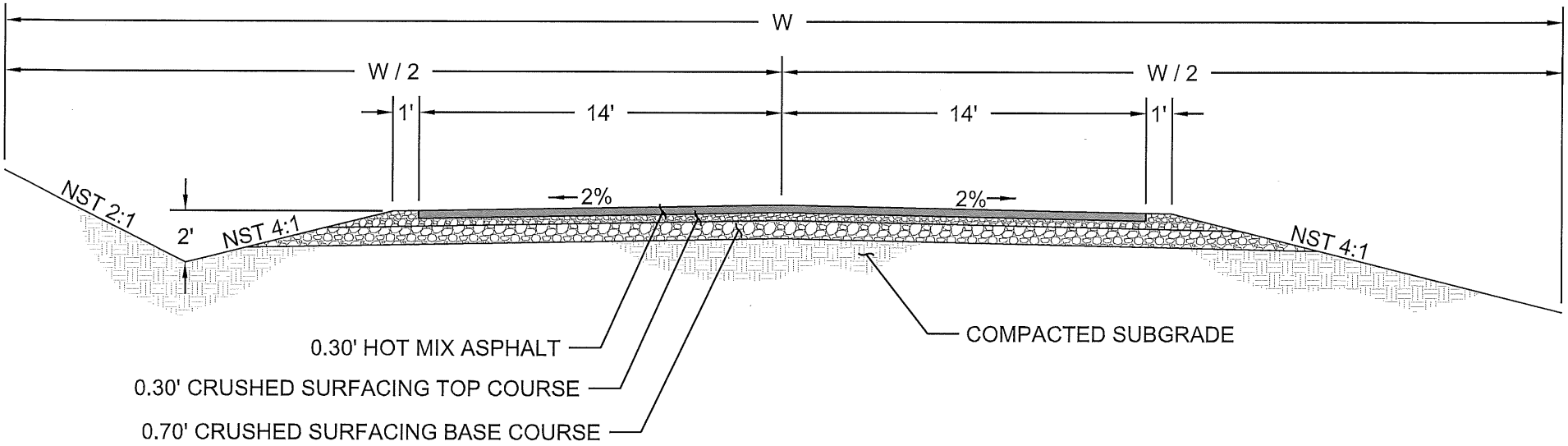

NOTES:

1. ALL CONSTRUCTION SHALL BE IN ACCORDANCE WITH THE STANDARD SPECIFICATIONS
2. RIGHT OF WAY WIDTH SHALL BE A MINIMUM OF 60 FEET. ADDITIONAL WIDTH MAY BE REQUIRED TO ALLOW FOR SLOPE PROTECTION AND/OR ADDITIONAL PAVEMENT AND SHOULDER WIDTH
3. PAVEMENT AND CRUSHED SURFACING WITH AND THICKNESS ARE MINIMUM REQUIRED. ADDITIONAL WIDTH AND THICKNESS MAY BE REQUIRED DEPENDING ON ANTICIPATED TRAFFIC VOLUMES AND TRUCK PERCENTAGES
4. HOT MIX ASPHALT SHALL BE INSTALLED IN TWO EQUAL THICKNESS LIFTS

BENTON COUNTY
ROAD DEPARTMENT

ROADWAY SECTION - STANDARD

APPROVED BY:

COUNTY ENGINEER

8-18-2015
DATE

STANDARD PLAN

R-1

SHEET 1 OF 1

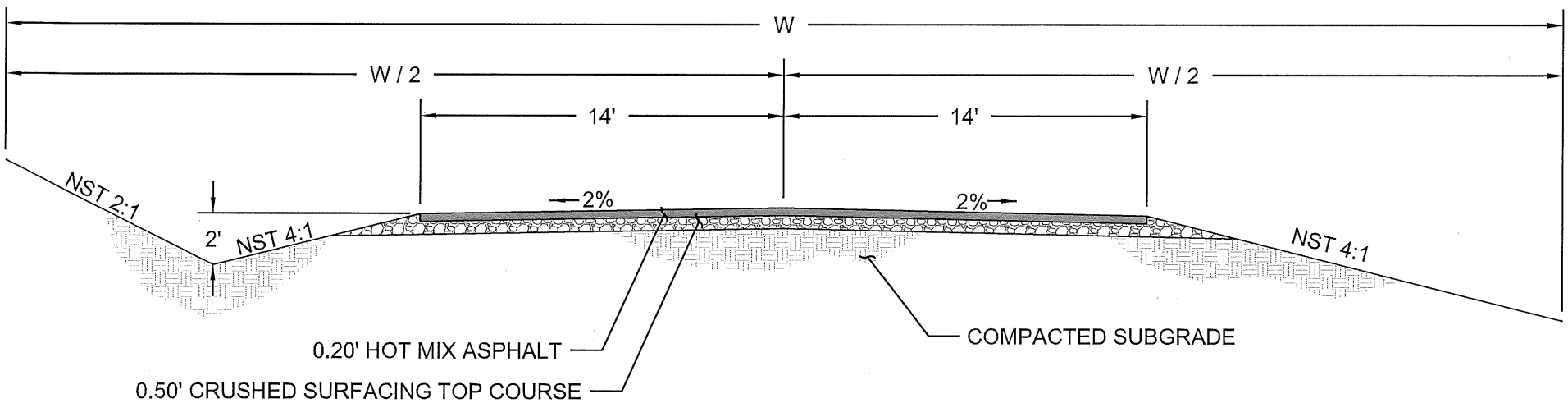

NOTES:

1. ALL CONSTRUCTION SHALL BE IN ACCORDANCE WITH THE STANDARD SPECIFICATIONS
2. RIGHT OF WAY WIDTH SHALL BE A MINIMUM OF 60 FEET. ADDITIONAL WIDTH MAY BE REQUIRED TO ALLOW FOR SLOPE PROTECTION AND/OR ADDITIONAL PAVEMENT AND SHOULDER WIDTH
3. PAVEMENT AND CRUSHED SURFACING WITH AND THICKNESS ARE MINIMUM REQUIRED. ADDITIONAL WIDTH AND THICKNESS MAY BE REQUIRED DEPENDING ON ANTICIPATED TRAFFIC VOLUMES AND TRUCK PERCENTAGES

BENTON COUNTY
ROAD DEPARTMENT

ROADWAY SECTION - URBAN LOCAL ACCESS

APPROVED BY:

COUNTY ENGINEER

8-18-2015
DATE

STANDARD PLAN

R-2

SHEET 1 OF 1

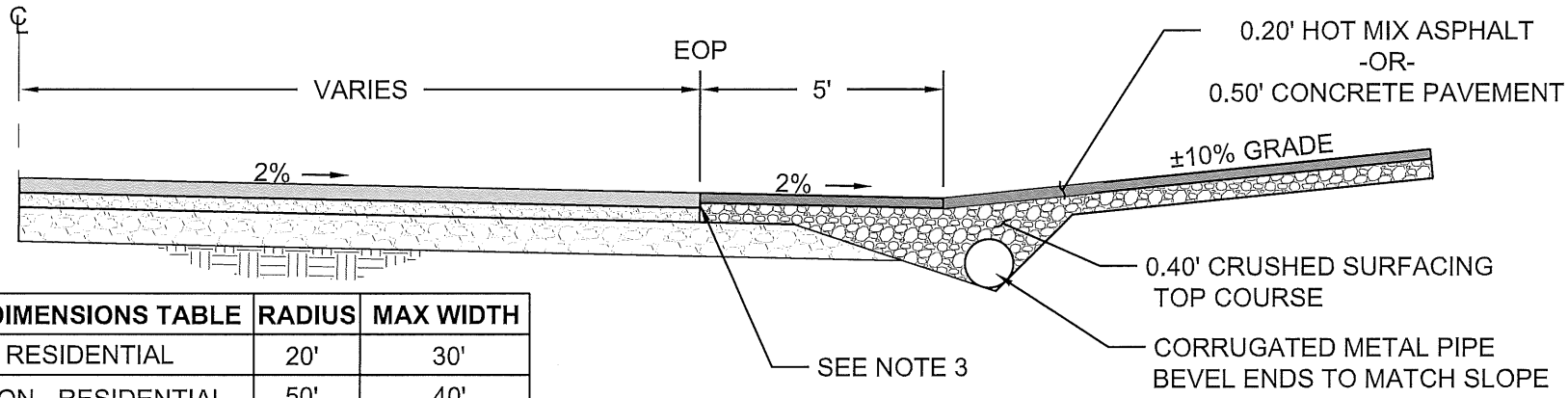

DIMENSIONS TABLE	RADIUS	MAX WIDTH
RESIDENTIAL	20'	30'
NON - RESIDENTIAL	50'	40'

NOTES:

1) DITCH BOTTOMS TO HAVE BALLAST COMP. IN PLACE, 3" MIN. DEPTH IF ROAD GRADE IS 5% OR STEEPER.

2) THE NEED FOR CORRUGATED METAL PIPE, SIZE, & LOCATION TO BE DETERMINED BY THE COUNTY ENGINEER.

3) NEAT VERTICAL SAW CUT & TACK EDGES OF EXISTING PAVEMENT.

4) APPROACH SHALL BE PAVED TO THE RIGHT OF WAY LINE OR 30' FROM CENTERLINE. WHICHEVER IS LESS.

5) CONCRETE ONLY ALLOWED FOR RESIDENTIAL APPROACHES ON ROADS 25 M.P.H. OR LESS. SEE APPROACH PERMIT POLICY.

6) DEPENDING ON THE SITUATION THE DIMENSIONS SHOWN HEREON MAY BE VARIED AS REQUIRED BY THE COUNTY ENGINEER.

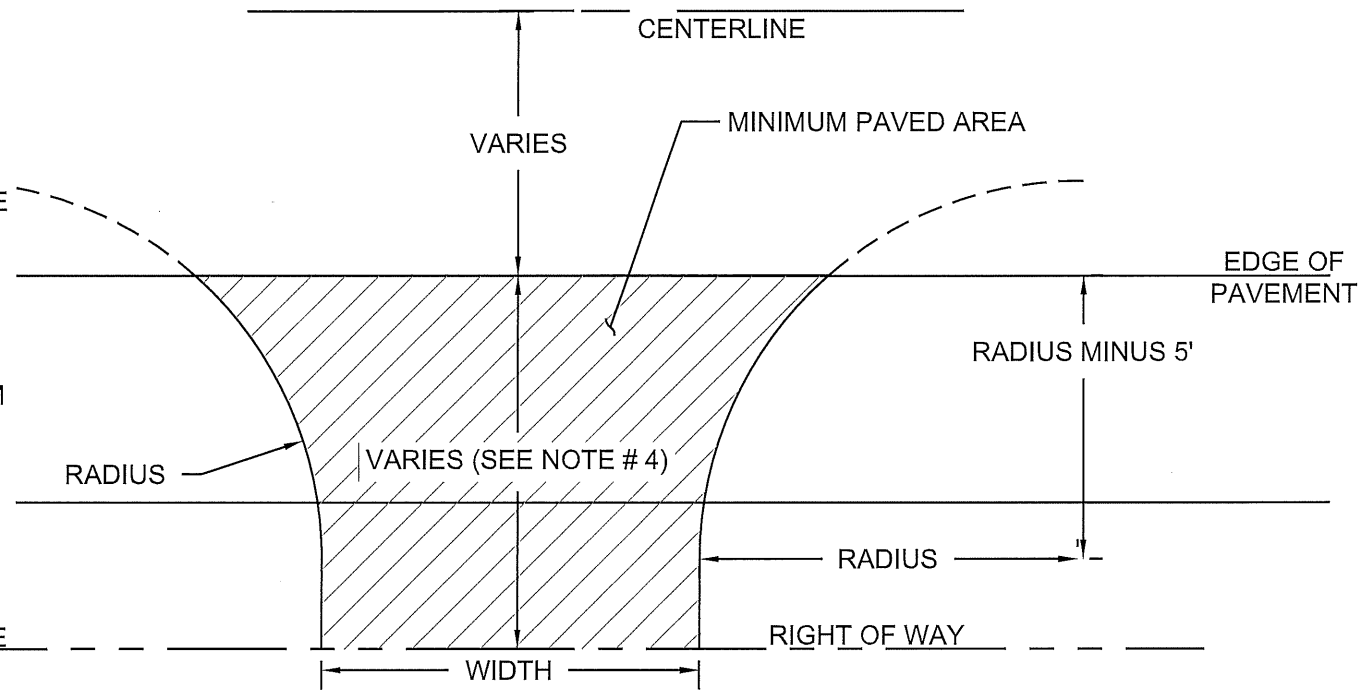

BENTON COUNTY
ROAD DEPARTMENT

COUNTY ROAD APPROACH

APPROVED BY:

COUNTY ENGINEER

8-18-2015
DATE

STANDARD PLAN

R-3

SHEET 1 OF 1

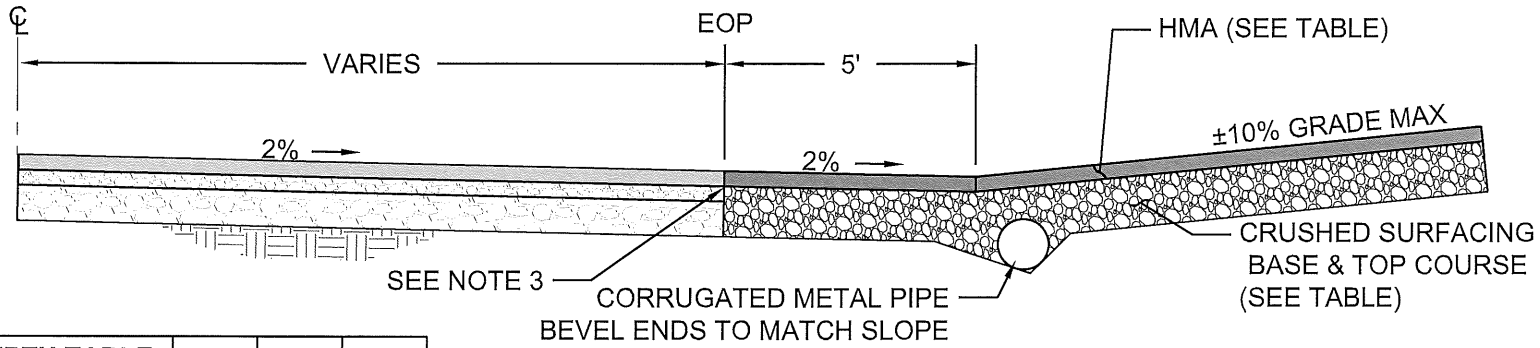

SURFACING DEPTH TABLE	CSBC	CSTC	HMA
RURAL	0.7'	0.3'	0.3'
URBAN LOCAL ACCESS	-	0.5'	0.2'

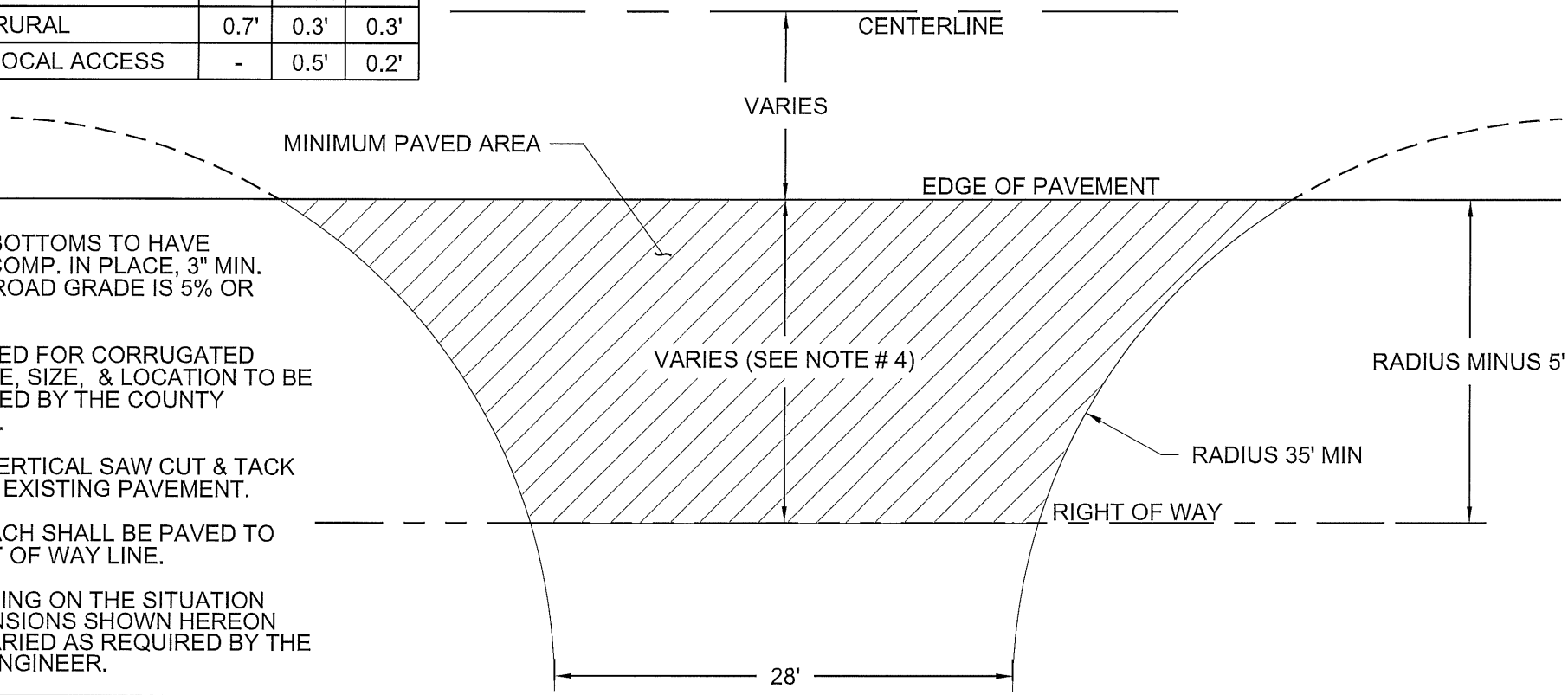

NOTES:

1) DITCH BOTTOMS TO HAVE BALLAST COMP. IN PLACE, 3" MIN. DEPTH IF ROAD GRADE IS 5% OR STEEPER.

2) THE NEED FOR CORRUGATED METAL PIPE, SIZE, & LOCATION TO BE DETERMINED BY THE COUNTY ENGINEER.

3) NEAT VERTICAL SAW CUT & TACK EDGES OF EXISTING PAVEMENT.

4) APPROACH SHALL BE PAVED TO THE RIGHT OF WAY LINE.

5) DEPENDING ON THE SITUATION THE DIMENSIONS SHOWN HEREON MAY BE VARIED AS REQUIRED BY THE COUNTY ENGINEER.

BENTON COUNTY
ROAD DEPARTMENT

PRIVATE ROAD APPROACH

APPROVED BY:

COUNTY ENGINEER

8-18-2015
DATE

STANDARD PLAN

R-4

SHEET 1 OF 1

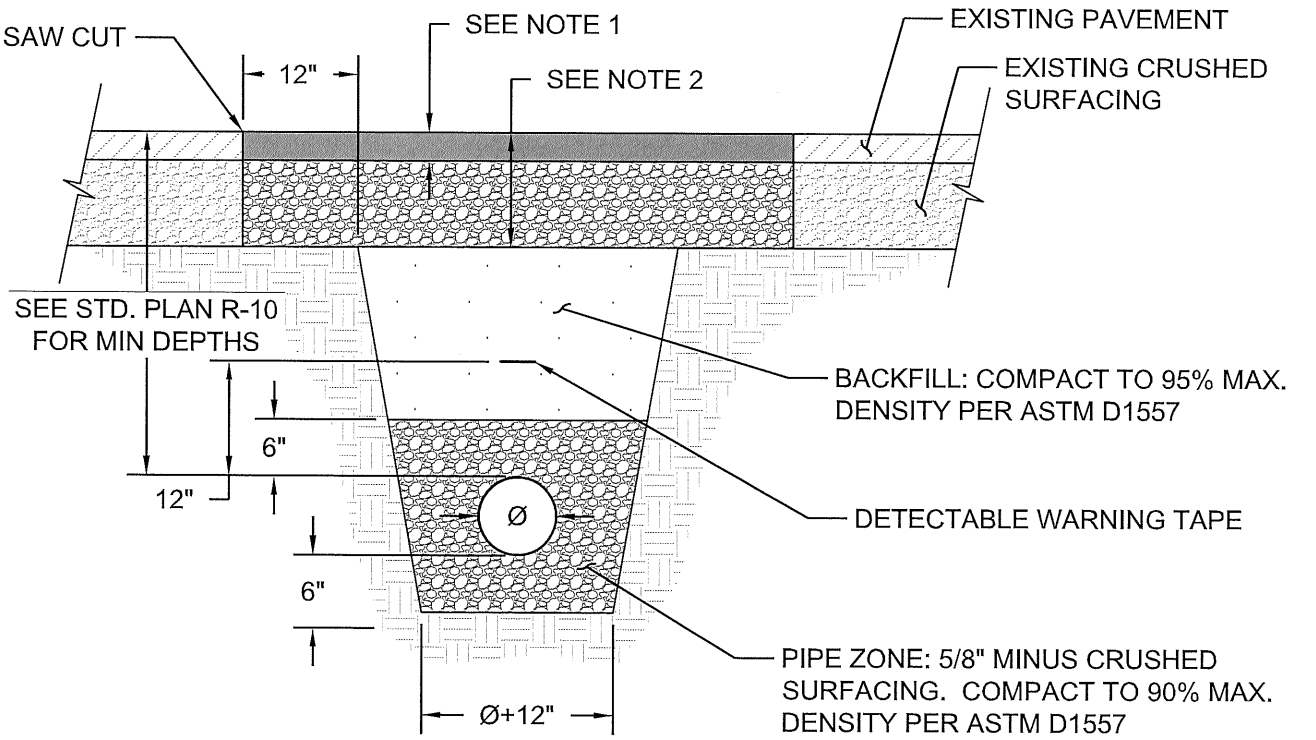

SECTION VIEW

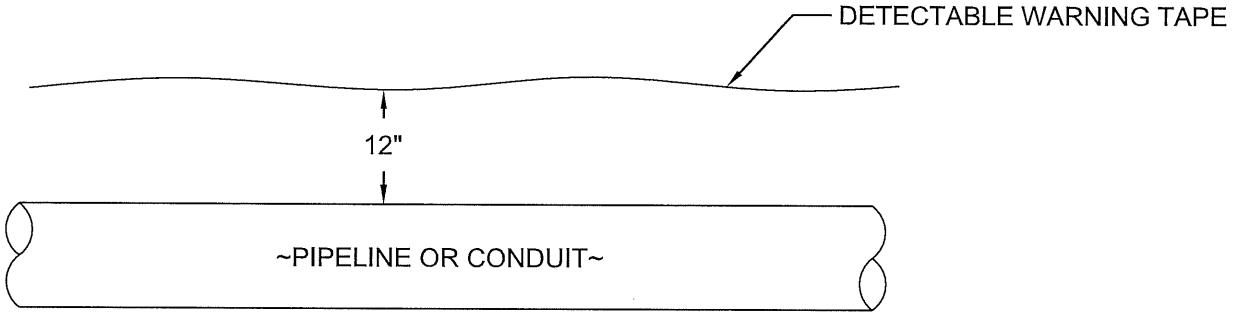

PROFILE VIEW

NOTES:

1. HOT MIX ASPHALT CLASS 1/2 INCH PG 70-28 TO MATCH EXISTING PAVEMENT THICKNESS OR 3 INCHES, WHICHEVER IS MORE. PLACE IN ACCORDANCE WITH SECTION 5-04.3(5)E OF THE STANDARD SPECIFICATIONS
2. 5/8" MINUS CRUSHED SURFACING TO MATCH EXISTING CRUSHED SURFACING THICKNESS OR 9 INCHES, WHICHEVER IS MORE. COMPACT TO 95% OF MAXIMUM DENSITY PER ASTM D1557. CDF MAY BE REQUIRED BY COUNTY ENGINEER
3. PIPE ZONE AND BACKFILL SHALL BE PLACED IN ACCORDANCE WITH SECTION 7-08.3(3) OF THE STANDARD SPECIFICATIONS
4. DETECTABLE WARNING TAPE SHALL BE COLOR CODED TO THE TYPE OF UTILITY BEING INSTALLED
5. SAW CUT CLEAN, STRAIGHT EDGES ON BOTH SIDES OF TRENCH 12 INCHES BACK FROM TOP OF EXCAVATION. COAT ALL CUT EDGES WITH ASPHALT FOR TACK COAT PRIOR TO PAVING

BENTON COUNTY ROAD DEPARTMENT

TRENCH CROSSING

APPROVED BY:

COUNTY ENGINEER

8-18-2015
DATE

STANDARD PLAN

R-5

SHEET 1 OF 1

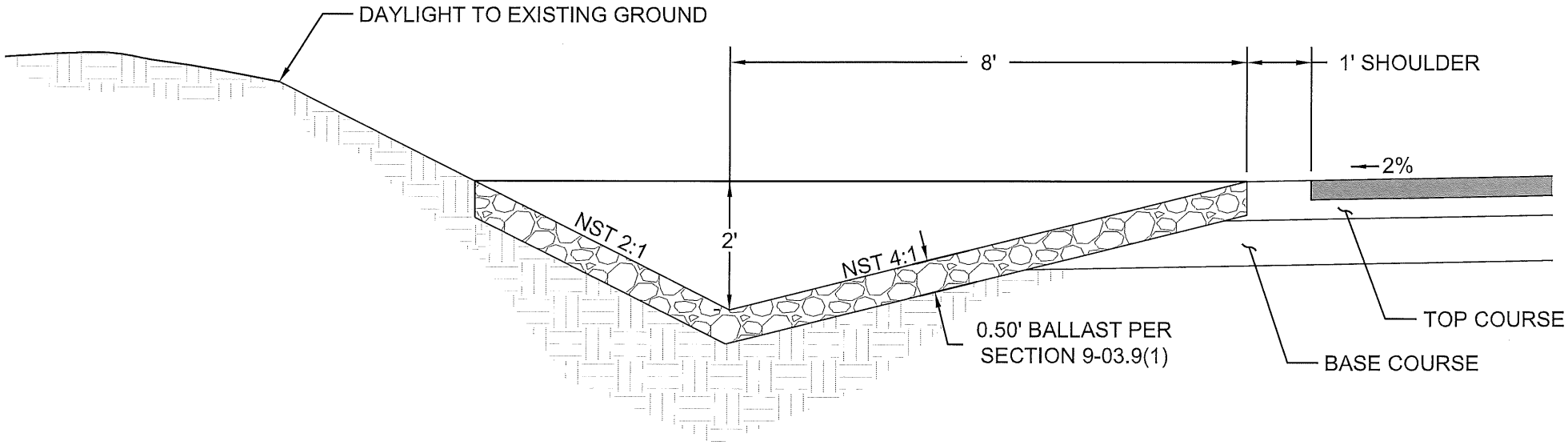

NOTES:

1. ALL CONSTRUCTION SHALL BE IN ACCORDANCE WITH THE STANDARD SPECIFICATIONS
2. DITCH SLOPES AND DEPTHS SHALL BE FOR FINSHED DITCH SECTION
3. DITCH BOTTOMS TO HAVE BALLAST COMP. IN PLACE 3" MIN. DEPTH IF ROAD GRADE IS 5% OR STEEPER.

BENTON COUNTY
ROAD DEPARTMENT

ROADWAY DITCH - STANDARD

APPROVED BY:

COUNTY ENGINEER

8-18-2015
DATE

STANDARD PLAN

R-6

SHEET 1 OF 1

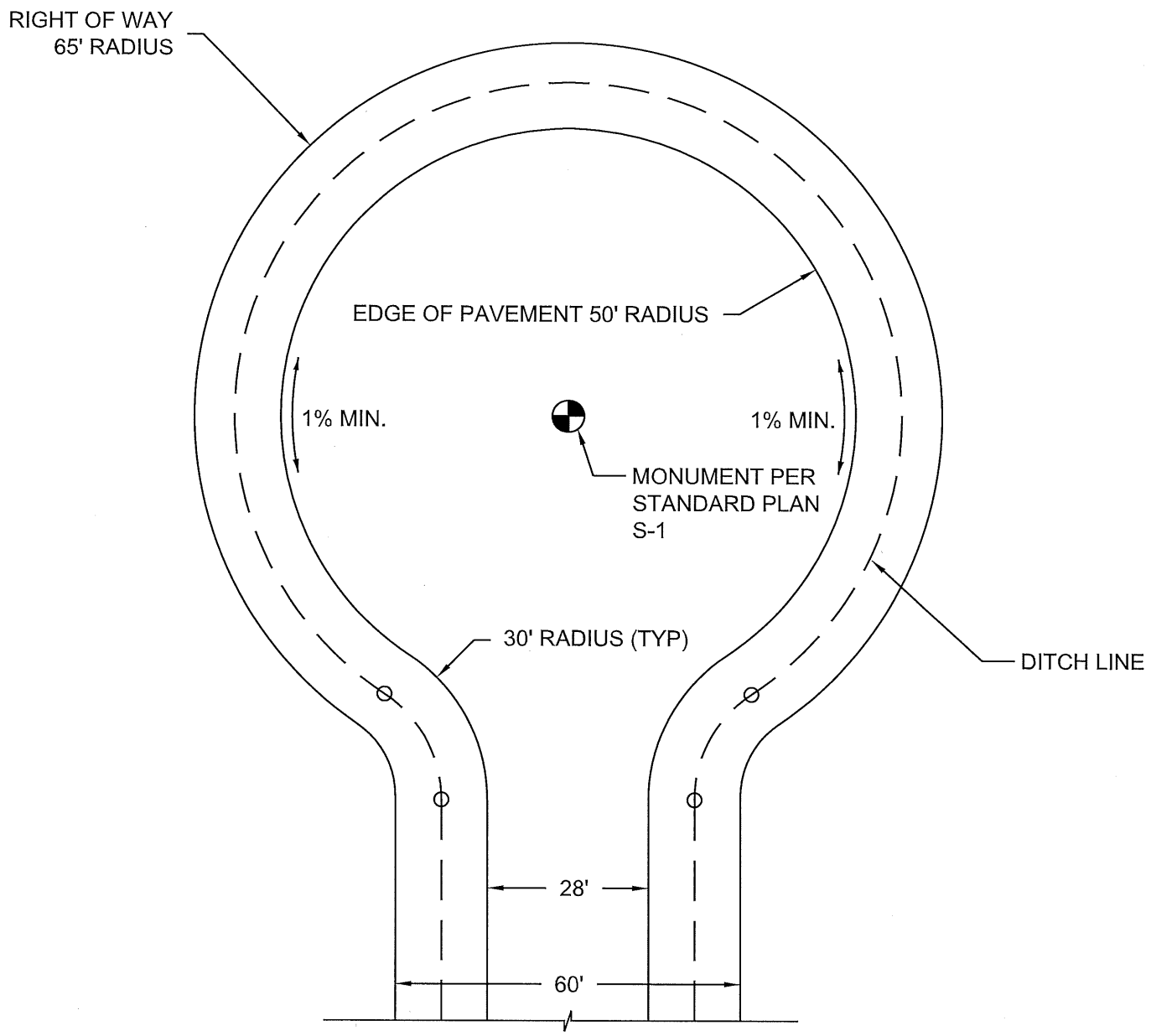

NOTES:

1. ANY LOTS ON THE CUL-DE-SAC SHALL HAVE ALL BUILDING PADS DESIGNED AT LEAST 1' ABOVE THE FINISHED GRADE OF THE ROADWAY.

BENTON COUNTY ROAD DEPARTMENT

CUL-DE-SAC INSIDE UGA

APPROVED BY:

COUNTY ENGINEER

8-18-2015
DATE

STANDARD PLAN

R-7

SHEET 1 OF 1

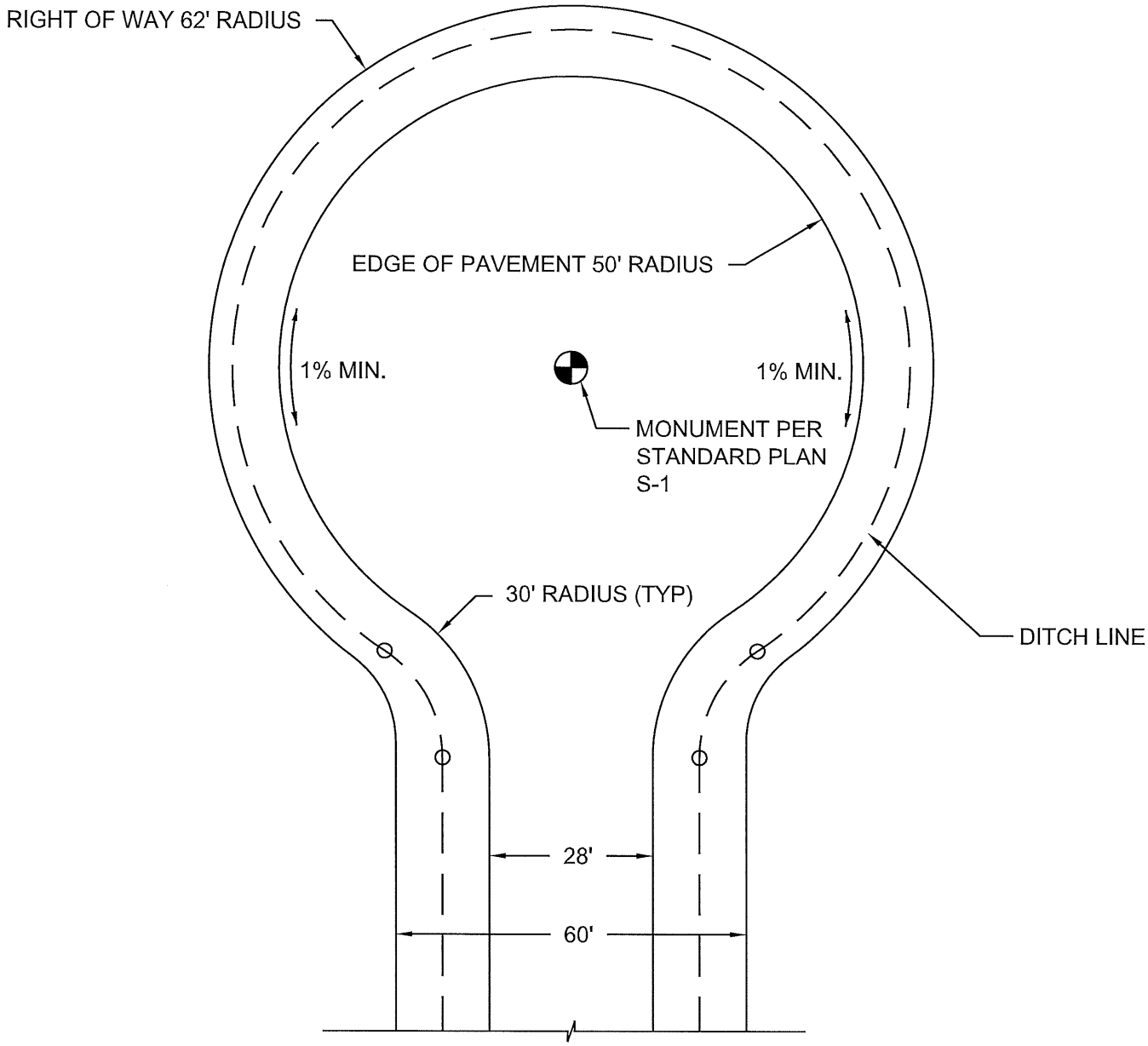

NOTES:

1. ANY LOTS ON THE CUL-DE-SAC SHALL HAVE ALL BUILDING PADS DESIGNED AT LEAST 1' ABOVE THE FINISHED GRADE OF THE ROADWAY.

BENTON COUNTY ROAD DEPARTMENT

CUL-DE-SAC OUTSIDE UGA

APPROVED BY:

COUNTY ENGINEER

8-18-2015
DATE

STANDARD PLAN

R-8

SHEET 1 OF 1

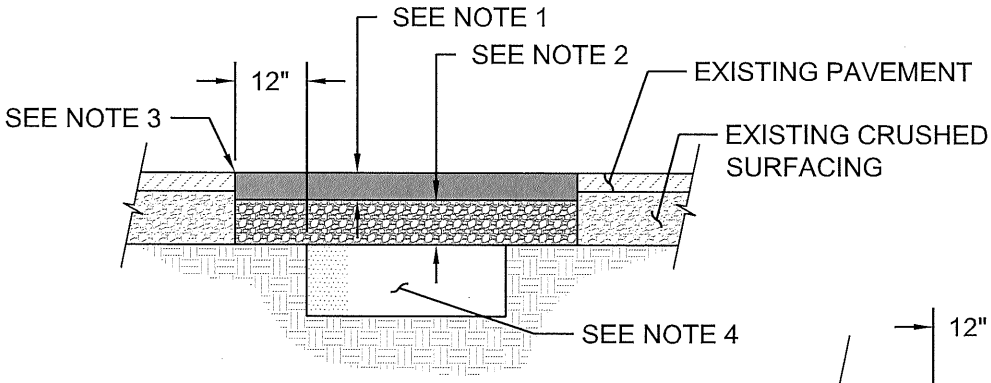

ASPHALT SURFACING

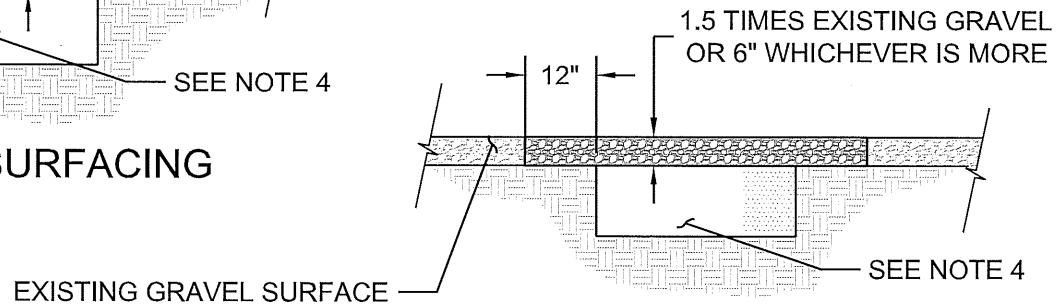

GRAVEL SURFACING

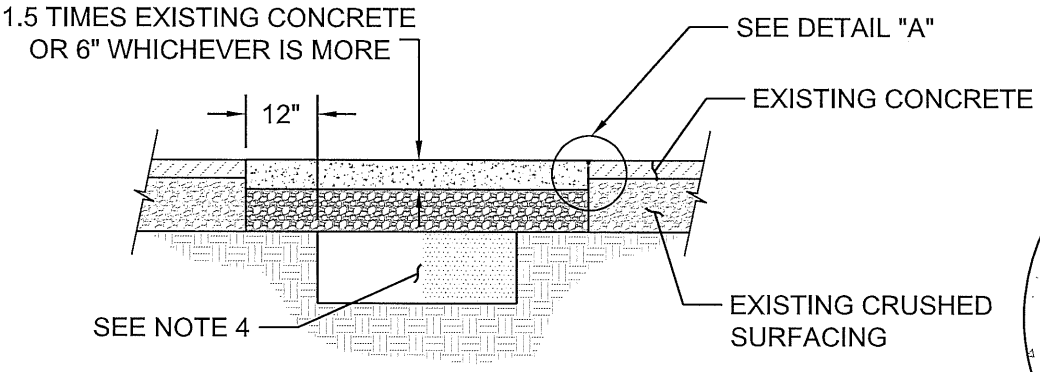

CONCRETE SURFACING

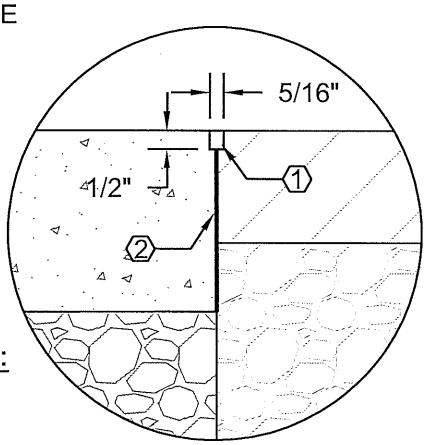

DETAIL "A"

CONSTRUCTION NOTES:

1. POLYURETHANE JOINT SEALANT PER SECTION 9-04.2(3)
2. 30 LB ROOFING FELT

NOTES:

1. HOT MIX ASPHALT CLASS 1/2 INCH PG 70-28 SHALL BE 1.5 TIMES EXISTING PAVEMENT THICKNESS OR 2 INCHES, WHICHEVER IS MORE. PLACE IN ACCORDANCE WITH SECTION 5-04.3(5)E OF THE STANDARD SPECIFICATIONS.
2. 5/8" MINUS CRUSHED SURFACING TO MATCH EXISTING CRUSHED SURFACING THICKNESS OR 6 INCHES, WHICHEVER IS MORE. COMPACT TO 95% OF MAXIMUM DENSITY PER ASTM D1557.
3. SAW CUT CLEAN, STRAIGHT EDGES ON BOTH SIDES OF TRENCH 12 INCHES BACK FROM TOP OF EXCAVATION. COAT ALL CUT EDGES WITH ASPHALT FOR TACK COAT PRIOR TO PAVING.
4. OVER EXCAVATE 12 INCHES OF EXISTING SUBGRADE. REMOVE UNSUITABLE SOIL AND DELETERIOUS MATERIALS IF ENCOUNTERED. BACKFILL AND COMPACT TO 95% MAX. DENSITY PER ASTM D1557

BENTON COUNTY ROAD DEPARTMENT

SURFACE REPAIR

APPROVED BY:

COUNTY ENGINEER

8-18-2015
DATE

STANDARD PLAN

R-9

SHEET 1 OF 1

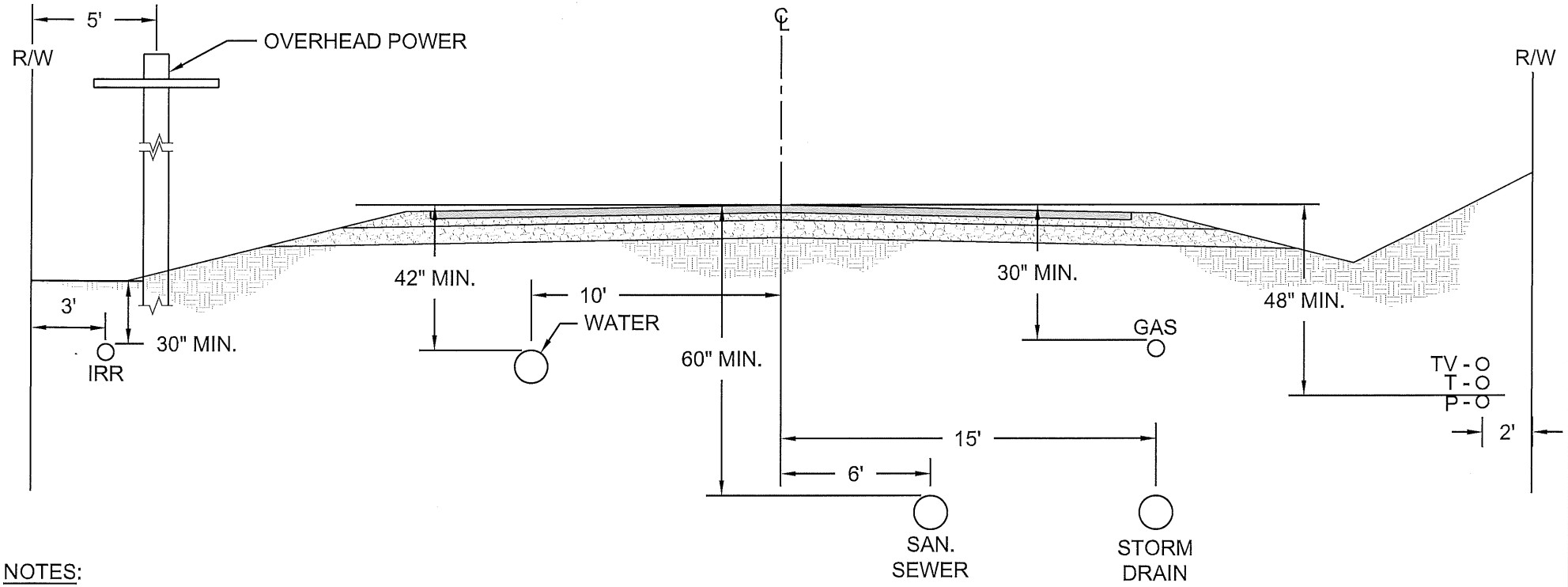

NOTES:

1. HORIZONTAL AND VERTICAL SEPARATION BETWEEN POTABLE WATER AND SANITARY SEWER/RECLAIMED WATER SHALL BE IN ACCORDANCE WITH THE DEPARTMENT OF ECOLOGY CRITERIA FOR SEWAGE WORKS DESIGN. MAINTAIN A MINIMUM OF 12" OF HORIZONTAL AND VERTICAL SEPARATION FOR ALL OTHER UTILITIES.

2. WHERE UTILITY AND/OR IRRIGATION EASEMENTS EXIST THOSE FACILITIES SHALL BE LOCATED OUTSIDE THE ROAD RIGHT-OF-WAY.

3. DETECTABLE MARKING TAPE SHALL BE PLACED 12" ABOVE ALL UNDERGROUND UTILITIES.

4. OVERHEAD POWER UTILITIES TO COORDINATE WITH UNDERGROUND WATER UTILITY LOCATIONS TO AVOID PLACEMENT CONFLICTS.

BENTON COUNTY
ROAD DEPARTMENT

UTILITY LOCATION - STANDARD

APPROVED BY:

COUNTY ENGINEER

8-18-2015
DATE

STANDARD PLAN

R-10

SHEET 1 OF 1

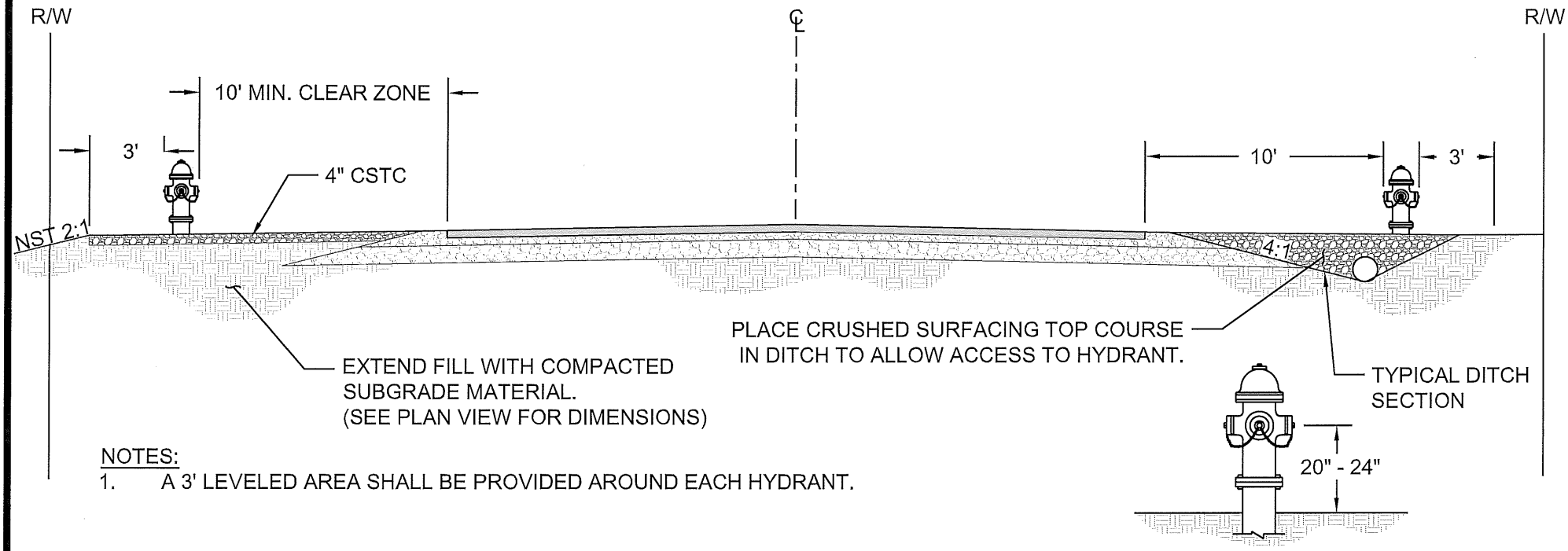

NOTES:

1. A 3' LEVELED AREA SHALL BE PROVIDED AROUND EACH HYDRANT.

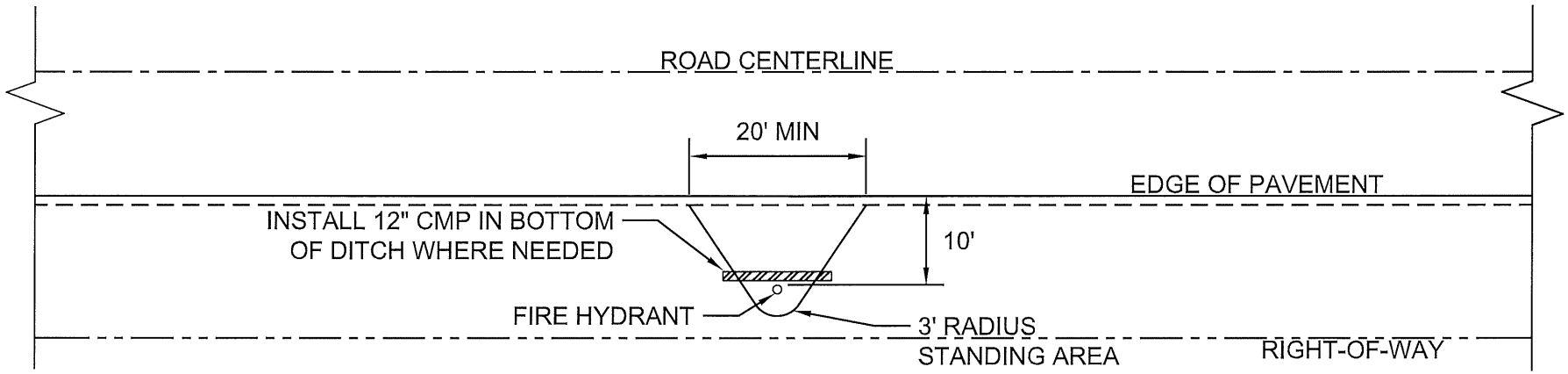

BENTON COUNTY
ROAD DEPARTMENT

FIRE HYDRANT LOCATION - STANDARD

APPROVED BY:

COUNTY ENGINEER

8-18-2015
DATE

STANDARD PLAN

R-11

SHEET 1 OF 1

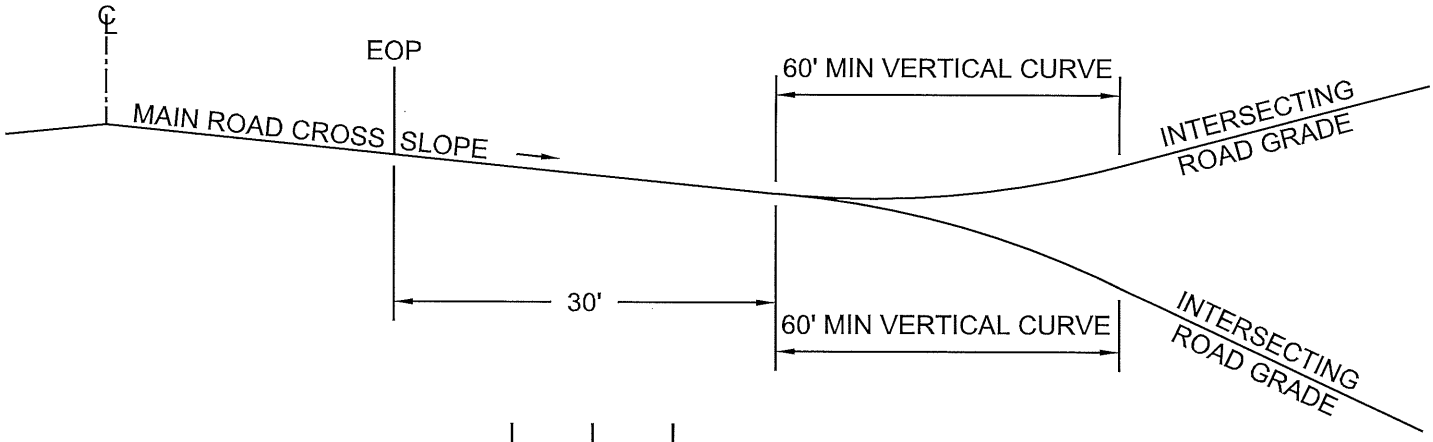

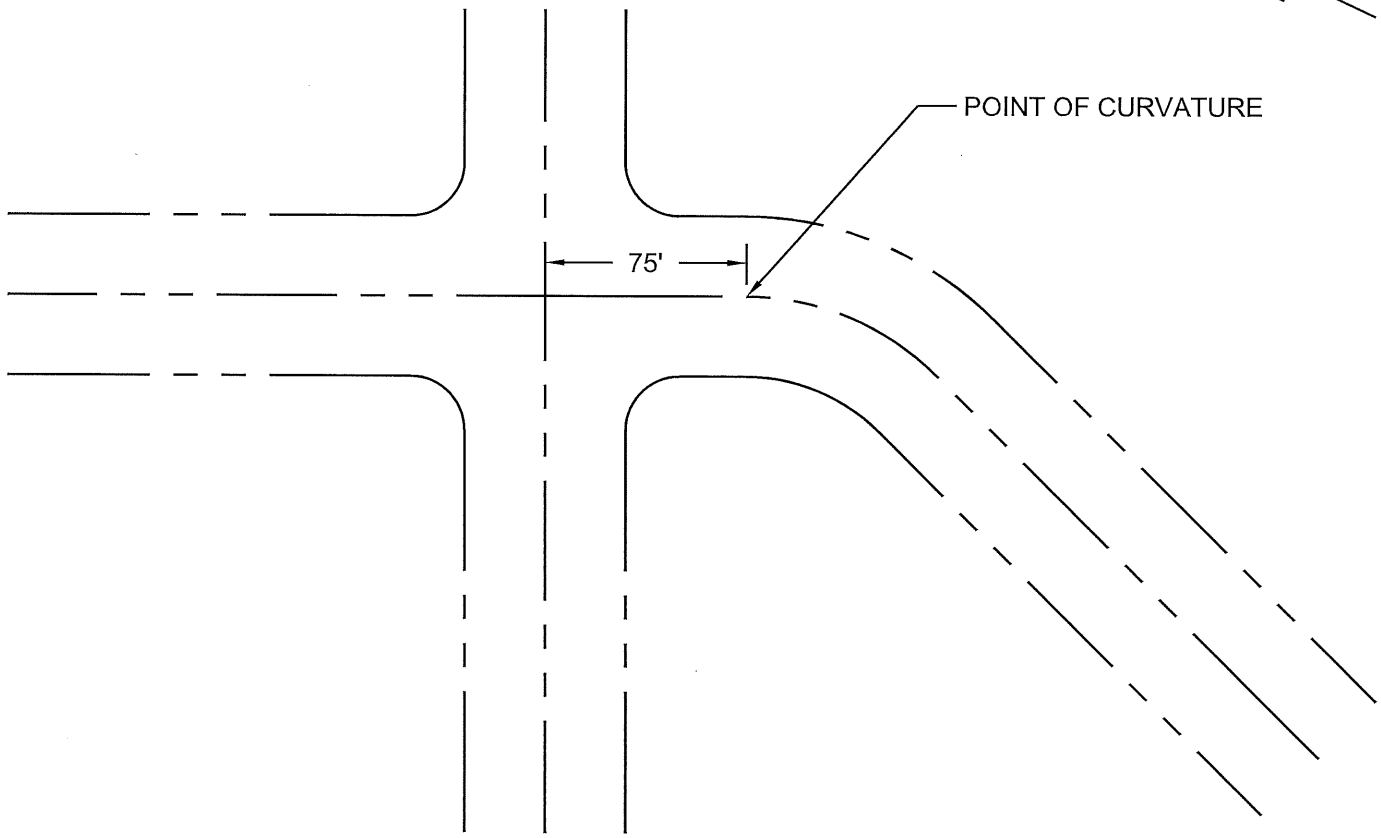

NOTES:

1. AVOID INTERSECTIONS IN AREAS WHERE MAIN ROAD IS SUPERELEVATED.
2. INTERSECTION SHALL HAVE NO MORE THEN FOUR LEGS.
3. STOPPING SIGHT DISTANCE SHALL BE MET FOR ALL LEGS APPROACHING THE INTERSECTION.
4. LIMIT ANGLE BETWEEN LEGS TO A MINIMUM OF 75°.
5. OFFSET INTERSECTION MINIMUM 300' APART.
6. SIGHT TRIANGLES SHALL BE MAINTAINED FOR ALL LEGS OF THE INTERSECTION. THIS MAY INCLUDE ADDITIONAL GRADING, CLEARING AND/OR THE DEDICATION OF RIGHT OF WAY OR EASEMENTS.

BENTON COUNTY ROAD DEPARTMENT

INTERSECTION PLAN

APPROVED BY:

COUNTY ENGINEER

8-18-2015
DATE

STANDARD PLAN

R-12

SHEET 1 OF 1

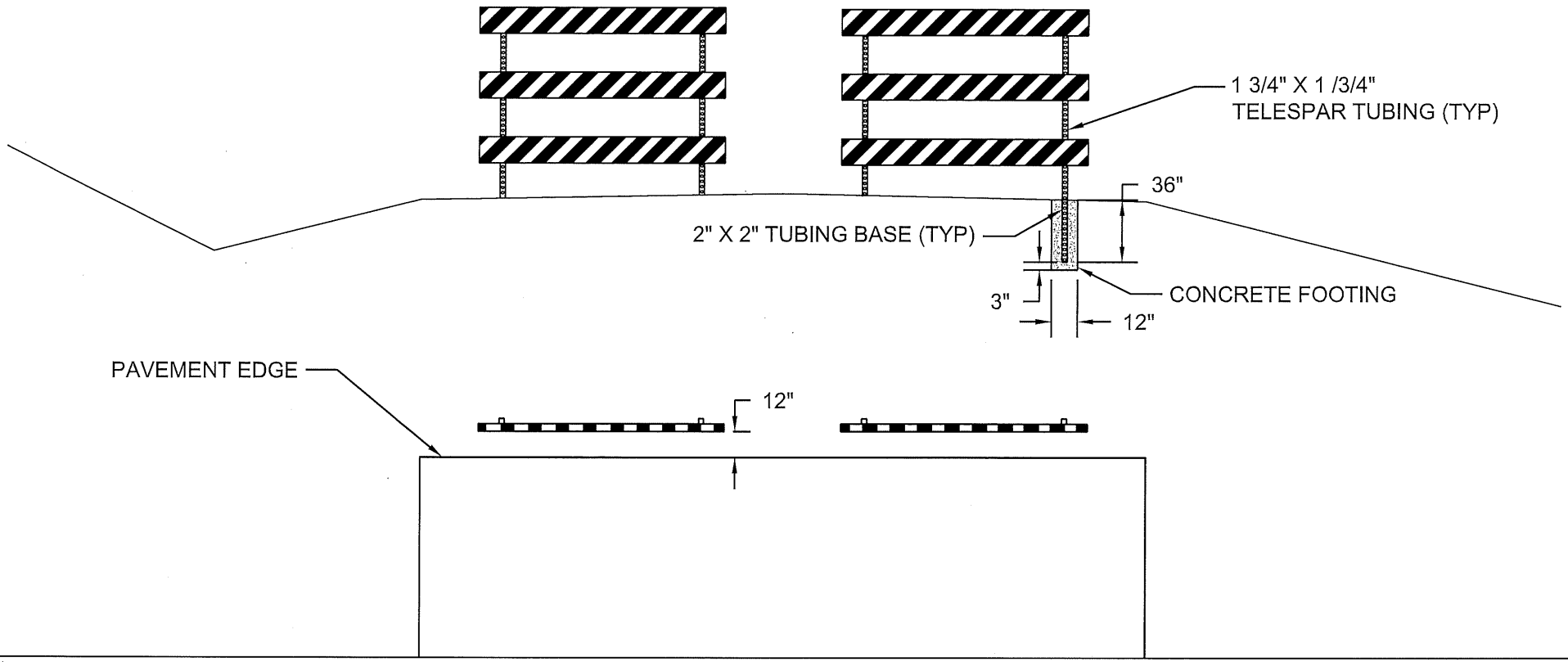

NOTES:

1. CONSTRUCT BARRICADE IN ACCORDANCE WITH 2009 MUTCD
2. REMOVE CONCRETE FOOTING UPON EXTENSION OF ROADWAY

BENTON COUNTY ROAD DEPARTMENT

TYPE 3 BARRICADE PLACEMENT

APPROVED BY:

COUNTY ENGINEER

8-18-2015
DATE

STANDARD PLAN

R-13

SHEET 1 OF 1

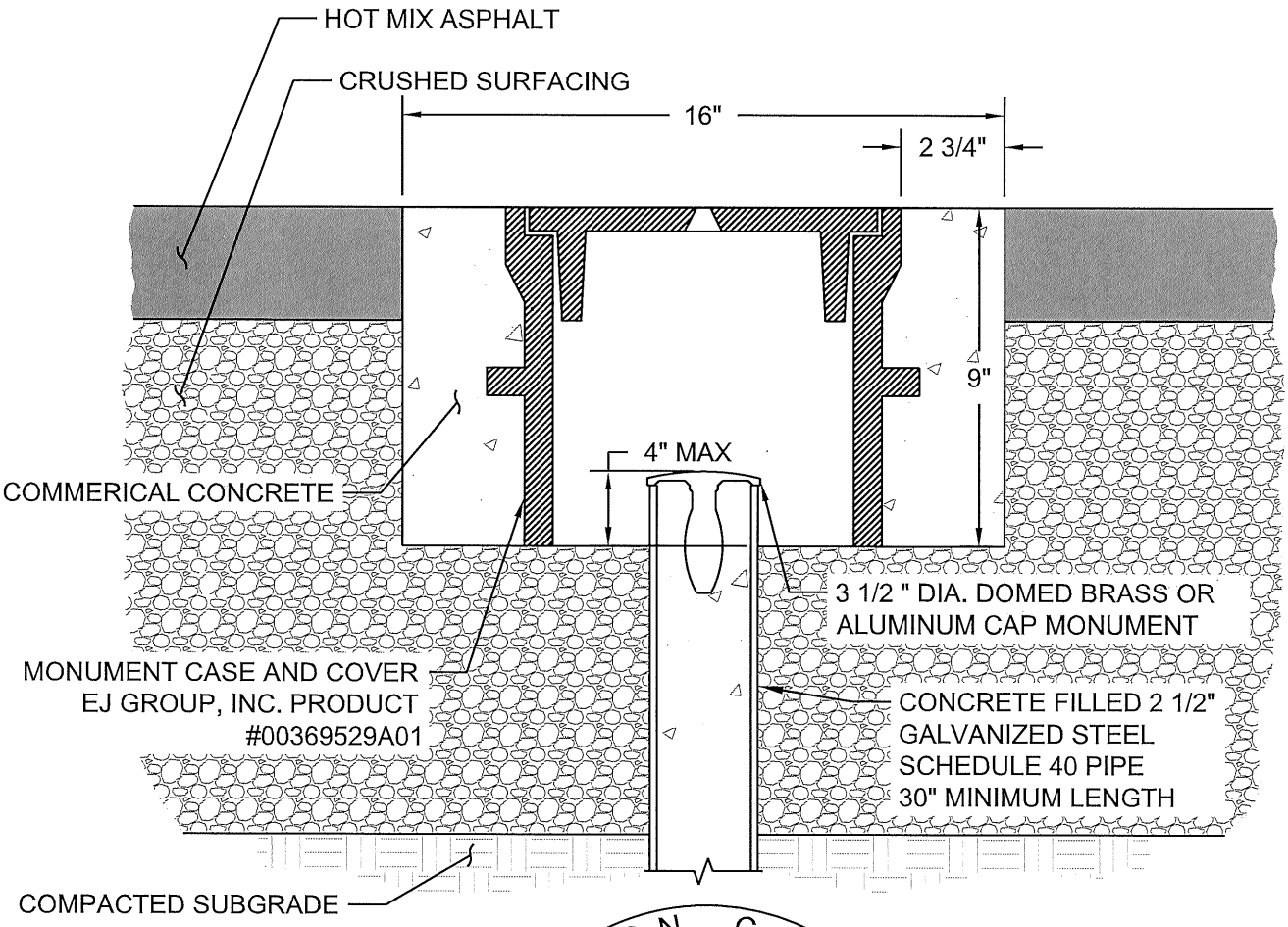

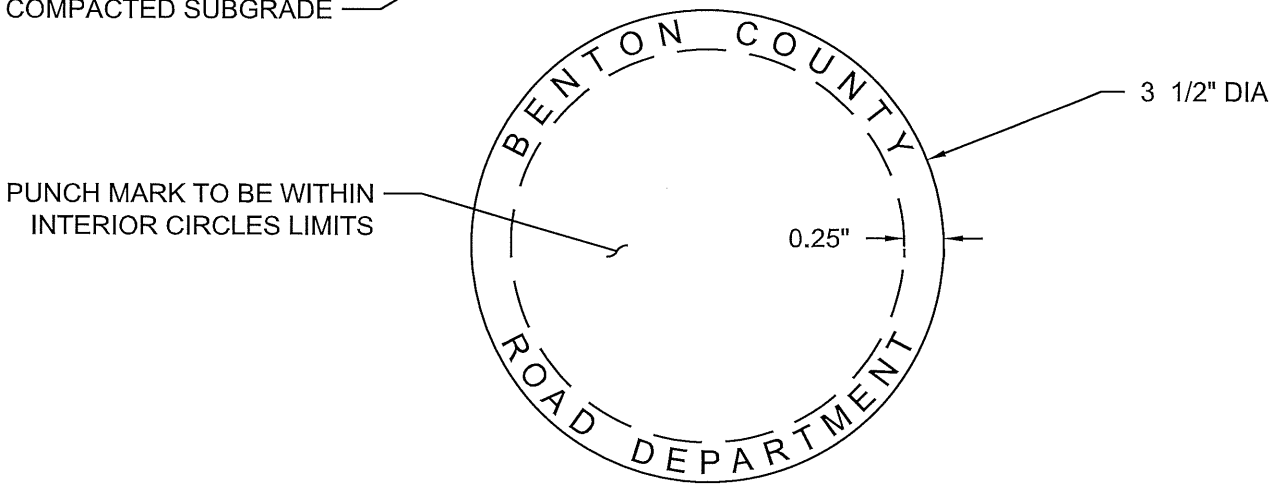

NOTES:

1. WASHINGTON STATE LICENSED PROFESSIONAL LAND SURVEYOR TO REFERENCE MONUMENT FOR INSTALLATION AND PUNCH CAP AFTER INSTALLATION.
2. INSIDE OF MONUMENT CASE SHALL BE KEPT CLEAN OF CONCRETE, ASPHALT AND OTHER MATERIALS THAT COULD IMPEED FREE DRAINING OF WATER FROM THE CASE.
3. FOR MONUMENT CASE AND COVER DIMENSIONS SEE WSDOT STANDARD PLAN A-10.30.

BENTON COUNTY ROAD DEPARTMENT

MONUMENT CASE & COVER FOR SECTION & QUARTER CORNERS

APPROVED BY:

COUNTY ENGINEER

8-18-2015
DATE

STANDARD PLAN

R-14A

SHEET 1 OF 1

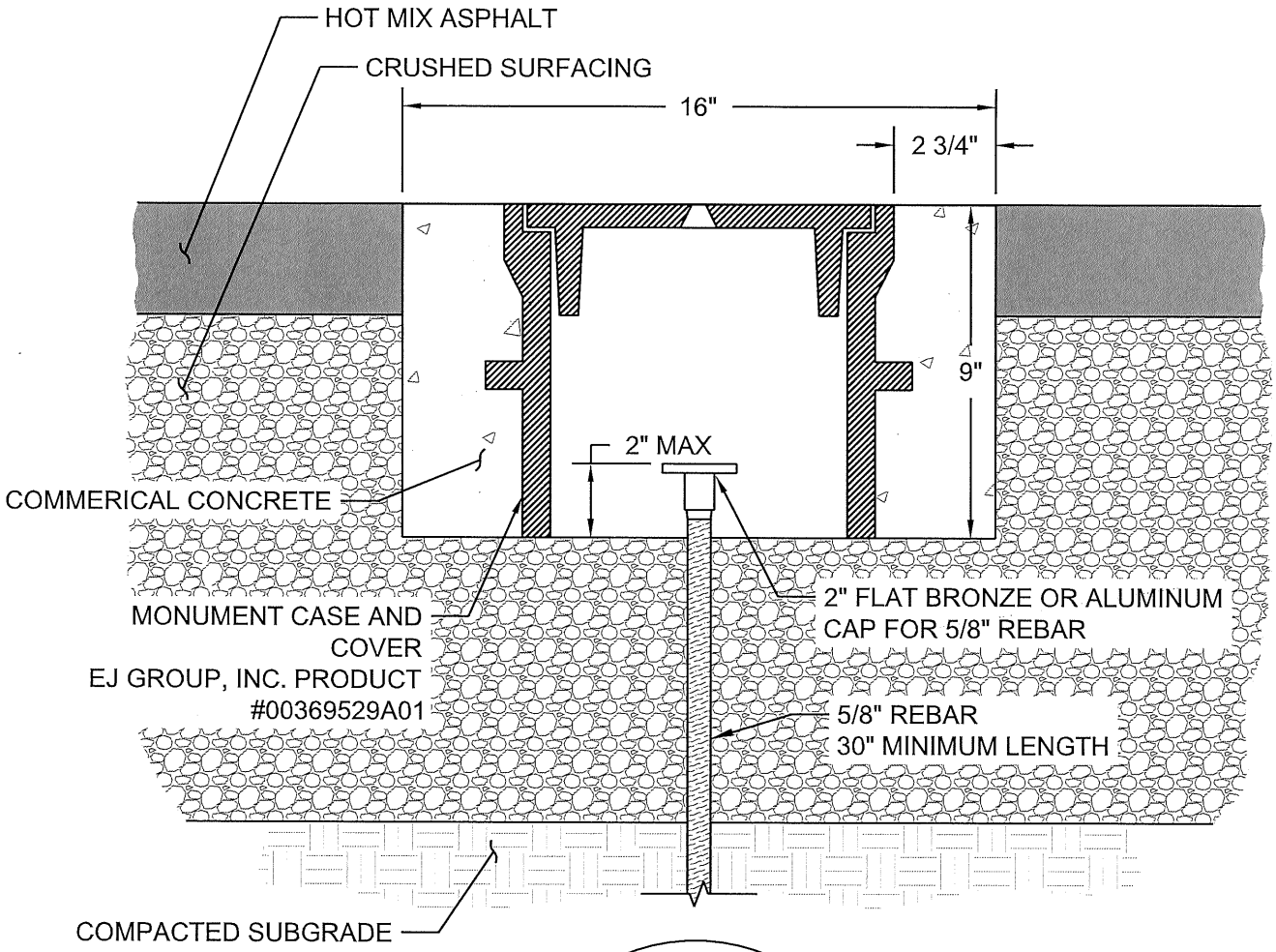

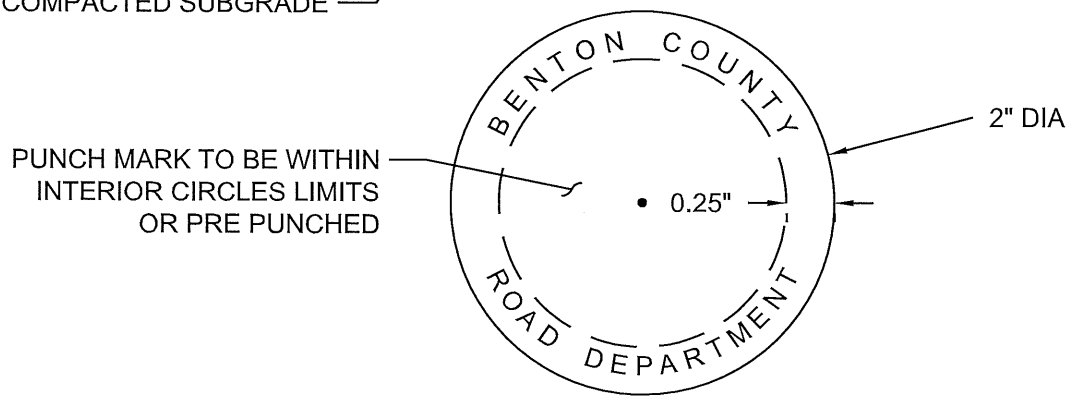

NOTES:

1. WASHINGTON STATE LICENSED PROFESSIONAL LAND SURVEYOR TO REFERENCE MONUMENT FOR INSTALLATION AND PUNCH CAP AFTER INSTALLATION.
2. INSIDE OF MONUMENT CASE SHALL BE KEPT CLEAN OF CONCRETE, ASPHALT AND OTHER MATERIALS THAT COULD IMPEED FREE DRAINING OF WATER FROM THE CASE.
3. FOR MONUMENT CASE AND COVER DIMENSIONS SEE WSDOT STANDARD PLAN A-10.30.

BENTON COUNTY ROAD DEPARTMENT

MONUMENT CASE & COVER

APPROVED BY:

COUNTY ENGINEER

8-18-2015
DATE

STANDARD PLAN

R-14B

SHEET 1 OF 1

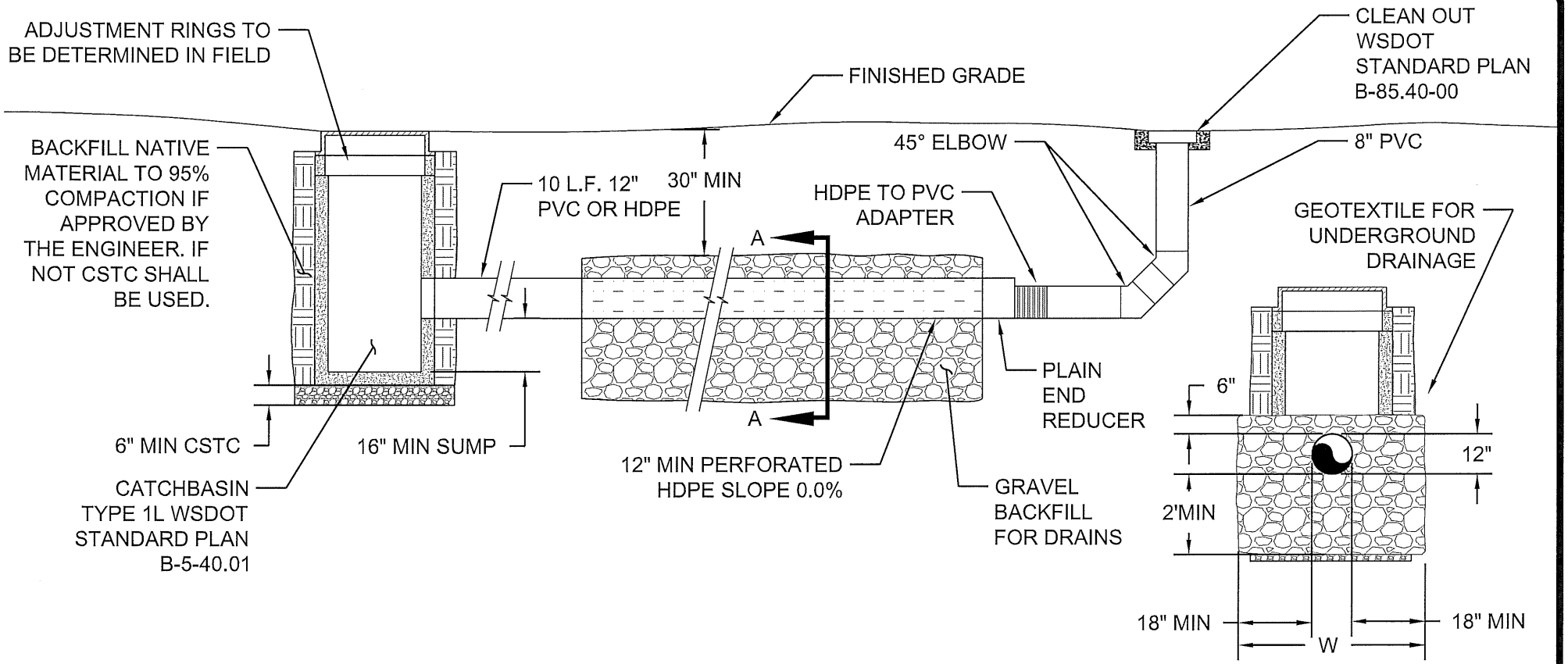

NOTES:

1. ALL WORKMANSHIP AND MATERIALS SHALL BE IN ACCORDANCE WITH THE MOST CURRENT VERSION OF THE WASHINGTON STATE DEPARTMENT OF TRANSPORTATION STANDARD SPECIFICATIONS FOR ROAD, BRIDGE AND MUNICIPAL CONSTRUCTION.
2. LENGTH AND WIDTH OF TRENCH MAY VARY TO ACCOMMODATE REQUIRED VOLUME TO INFILTRATE TYPE 1A STORM WITH 25 YEAR RETURN PERIOD, PER STORM WATER MANAGEMENT MANUAL FOR EASTERN WASHINGTON, WITHOUT OVERTOPPING GRATE.
3. WHEN TRENCH IS UNDER THE ROADWAY BACKFILL ABOVE TRENCH WITH CRUSHED SURFACING BASE COURSE TO THE BOTTOM OF THE FIRST AGGREGATE LAYER.

BENTON COUNTY
ROAD DEPARTMENT

EXFILTRATION TRENCH

APPROVED BY:

COUNTY ENGINEER

8-18-2015
DATE

STANDARD PLAN

R-15

SHEET 1 OF 1

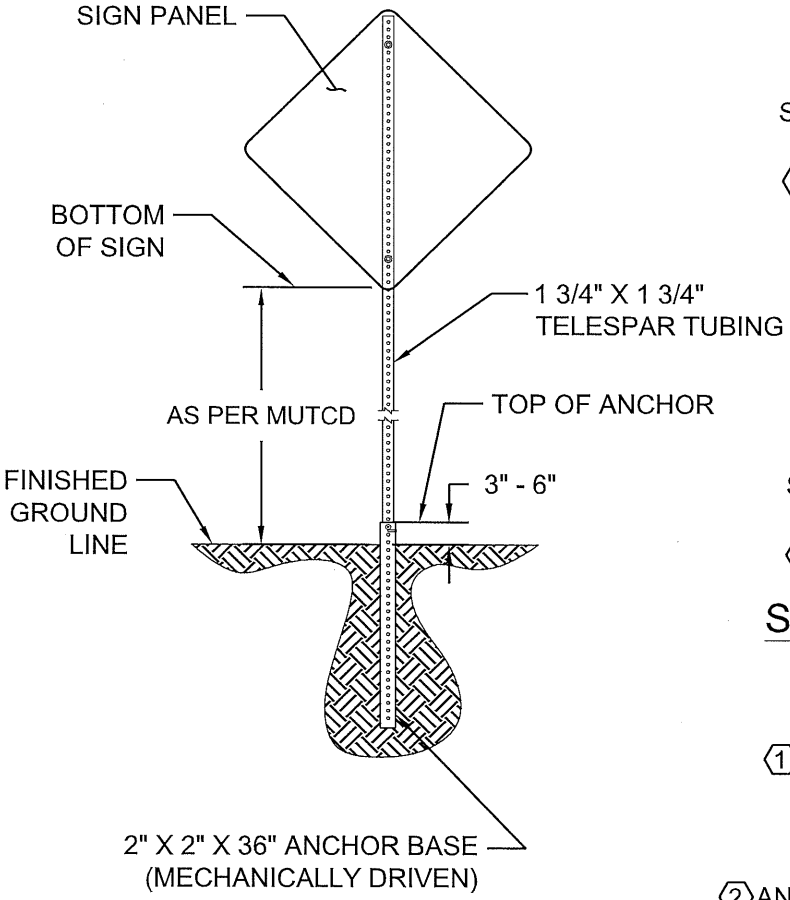

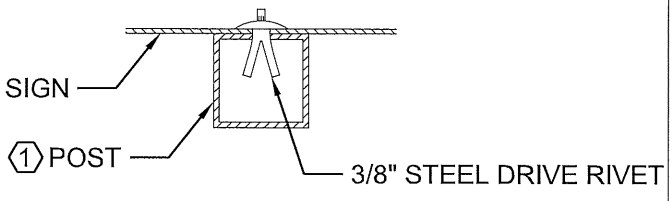

SIGN MOUNTING

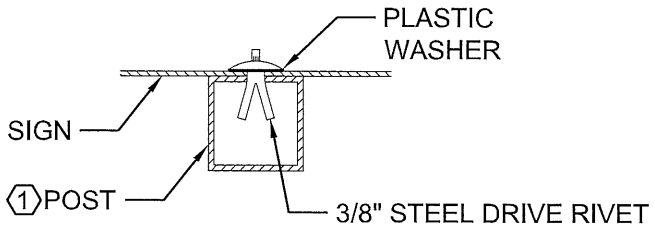

SIGN MOUNTING W/WASHER

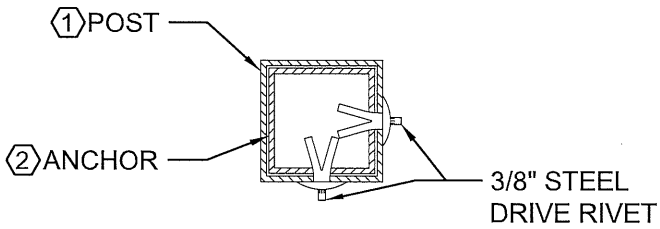

ANCHOR ASSEMBLY

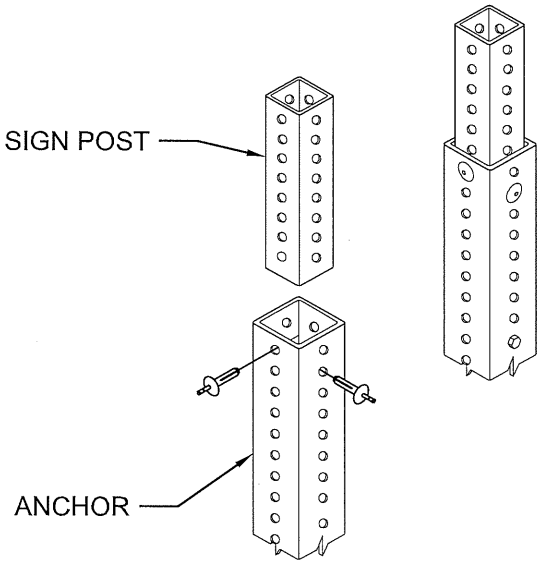

LEGEND

1 Post - 1-3/4" x 1-3/4" Square Perforated 0.105" Galvanized Steel Tubing

2 Anchor - 2" x 2" x 30", Square Perforated 0.105" Galvanized Steel Tubing

NOTES:

1. MOUNTING WITH WASHER REQUIRED WHEN SIGN THICKNESS IS 0.08"

BENTON COUNTY ROAD DEPARTMENT

STREET SIGN INSTALLATION

APPROVED BY:

COUNTY ENGINEER

8-18-2015

DATE

STANDARD PLAN

R-16

SHEET 1 OF 1

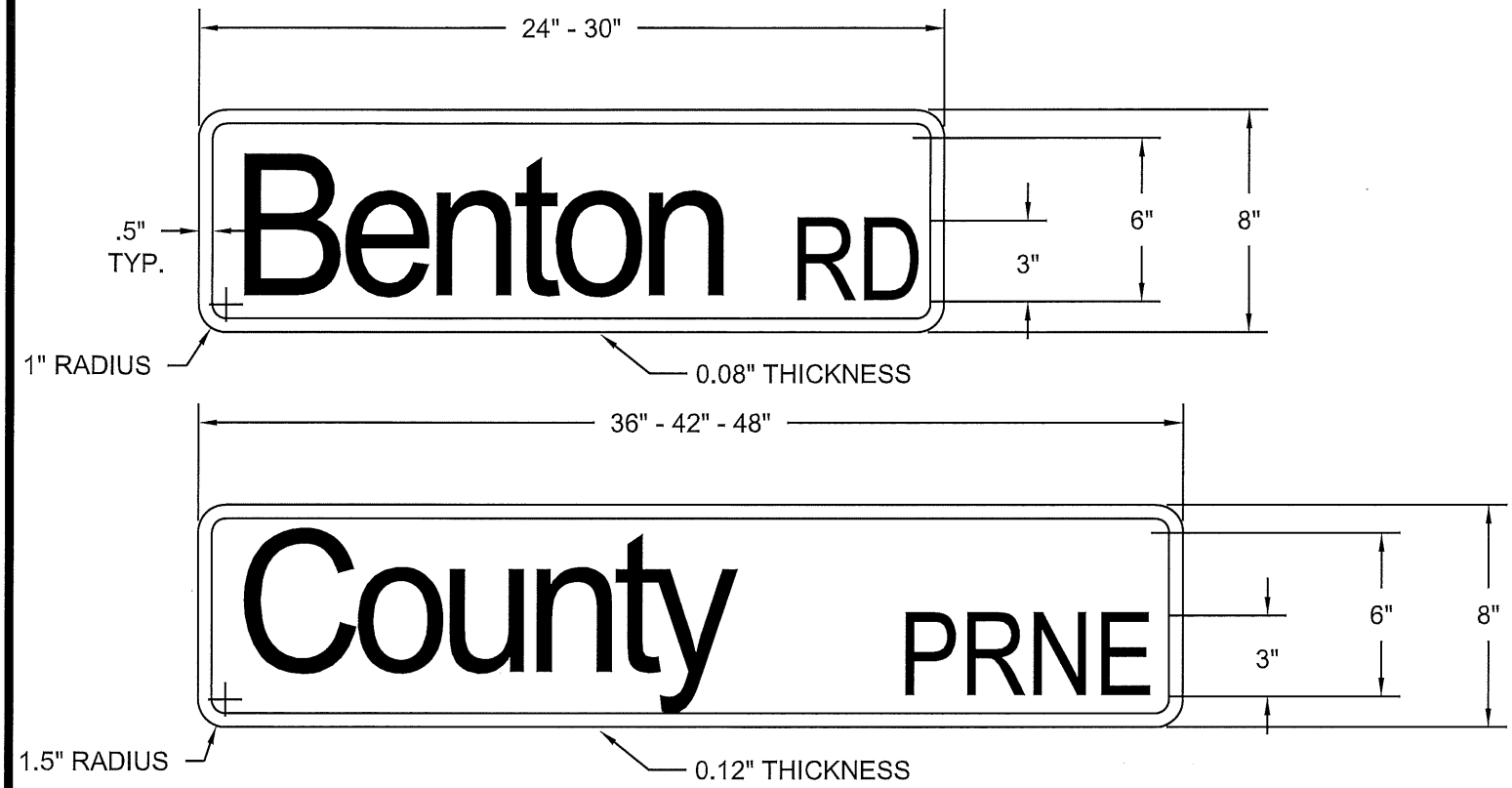

SIGNS
ASTM TYPE IV REFLECTIVE SHEETING
TYPEFACE: CLEARVIEW 1-B
PUBLIC ROADS - WHITE LETTERS ON GREEN BACKGROUND
PRIVATE ROADS - GREEN LETTERS ON WHITE BACKGROUND

BENTON COUNTY ROAD DEPARTMENT

STREET NAME SIGNS

APPROVED BY: _____ 8-18-2015
COUNTY ENGINEER DATE

STANDARD PLAN

R-17

SHEET 1 OF 2

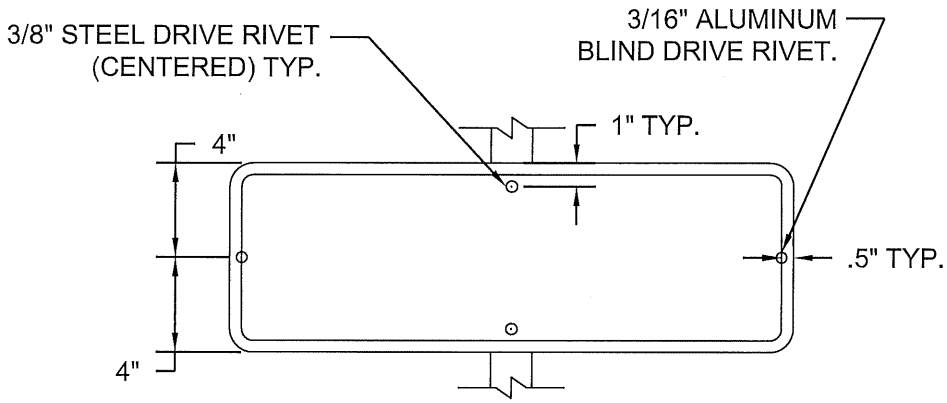

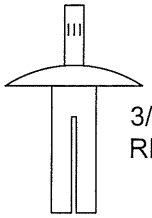

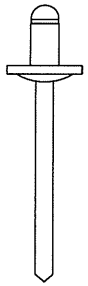

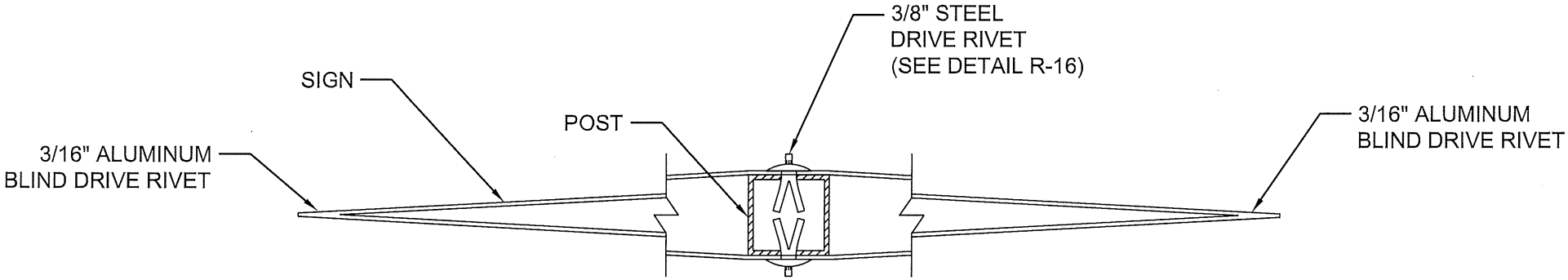

BENTON COUNTY
ROAD DEPARTMENT

STREET NAME SIGNS

APPROVED BY: _____
COUNTY ENGINEER

8-18-2015
DATE

STANDARD PLAN

R-17

SHEET 2 OF 2