APPENDIX A
Well Logs

Well @ P 602+91.04, RT.

CANCELLED
STATE OF WASHINGTON
DEPARTMENT OF CONSERVATION
AND DEVELOPMENT

WELL LOG

No. Appli. #458
Permit. #417

Date May 20, 1948

Record by owner

Source well driller's record

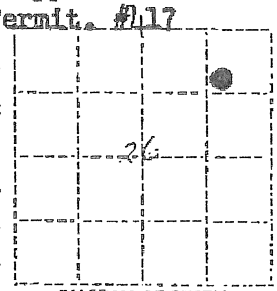

DIAGRAM OF SECTION

Location: State of WASHINGTON

County Benton

Area

Map

NE ¼ NE ¼ sec. 26 T. 8 N., R. 30 E. ~~W~~

Drilling Co. owner

Address

Method of Drilling dug Date Aug. 7 1947

Owner George R. Frederick

Address Kennewick, Wash.

Land surface, datum ft. above / below

CORRELATION	MATERIAL	THICKNESS (feet)	DEPTH (feet)
	Topsoil (winchester sand)	4	4
	Topsoil, black sand, boulders	2	6
	Black sand, pebbles & boulders	22	28
	Pump Test:		
	Dim: 28' x 18"		
	SWL: 12'		
	Dd: none		
	Yield: 300 gpm		
	Casing: 96" dia. from 0' to 10'; 18" dia. from 10' to 28'		
	Perfor: 3' sections of 18" tile not cemented from 10' to 28'.		
	Pump: Centrifugal, 3"		
	Motor: 7½ hp, electric		

(Transcribe driller's terminology literally but paraphrase as necessary, in parentheses. If material water-bearing, so state and record static level if reported. Give depths in feet below land-surface datum unless otherwise indicated. Correlate with stratigraphic column, if feasible. Following log of materials, list all casings, perforations, screens, etc.)

Turn up

Sheet ____ of ____ sheets

The Department of Ecology does NOT Warranty the Data and/or the Information on this Well Report.

STATE OF WASHINGTON
DEPARTMENT OF CONSERVATION
AND DEVELOPMENT

WELL LOG

No. Appli. #3396
Cert. #1744-A

Date March, 19 52

Record by Henry Dilts

Source Driller's Record

Location: State of WASHINGTON

County Benton

Area

Map

NE ¼ SE ¼ sec. 23 T. 8 N., R. 30 E. W.

DIAGRAM OF SECTION

Drilling Co. Henry Dilts

Address 1705 W. 1st Ave.; Kennewick, Washington

Method of Drilling Date Nov. 1 19 53

Owner I. J. & Cordelia V. Fink

Address Richland, Washington (711 Winslow)

Land surface, datum ft. above / below

CORRELATION	MATERIAL	THICKNESS (feet)	DEPTH (feet)
	(Transcribe driller's terminology literally but paraphrase as necessary, in parentheses. If material water-bearing, so state and record static level if reported. Give depths in feet below land-surface datum unless otherwise indicated. Correlate with stratigraphic column, if feasible. Following log of materials, list all casings, perforations, screens, etc.)		
	Sand	15	15
	Gravel & large rocks	15	30
Pump	Test:		
	Dim: 30' x 36"		
	SWL: 15'16"		
	Dd: 2'		
	Yield: 500 g.p.m.		
	Casing: 36" diameter, reinforced concrete, from top to 28'		

Turn up

Sheet ____ of ____

APPENDIX B:
WSDOT Standard Plans

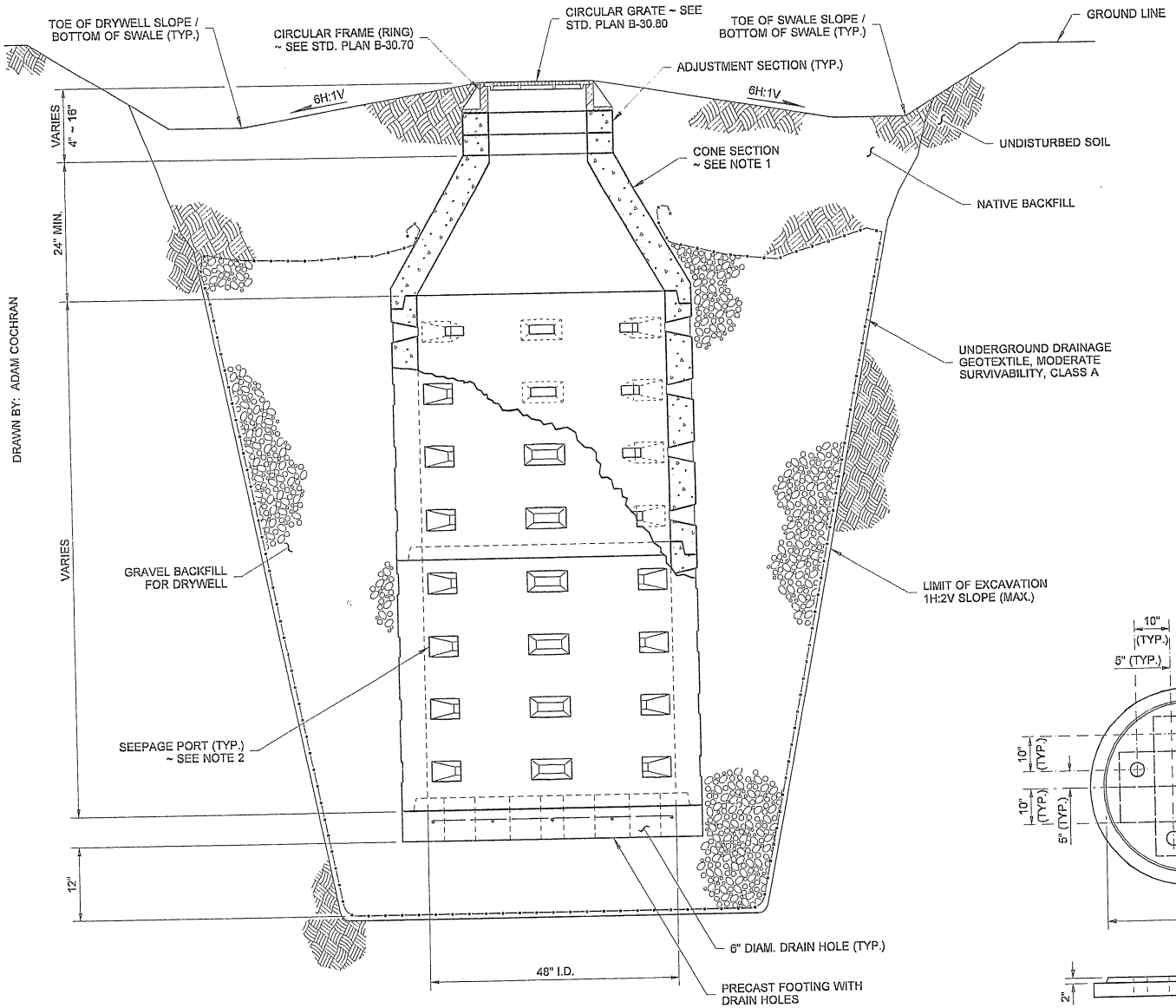

CUTAWAY ELEVATION VIEW

DRAWN BY: ADAM COCHRAN

NOTES

1. Precast cone sections may be eccentric or concentric.
2. Seepage port orientation varies among manufacturers.

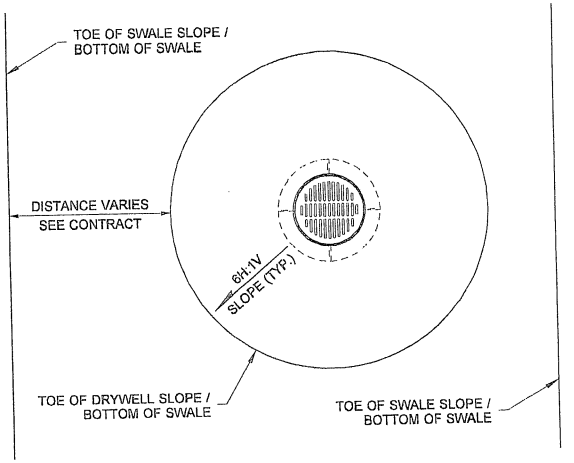

PLAN VIEW

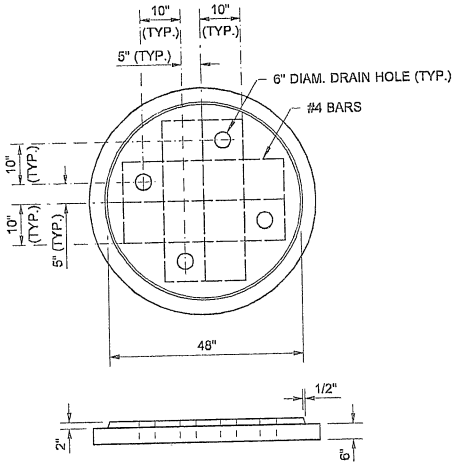

PRECAST FOOTING DETAIL

MATTHEW J. WITECKI
STATE OF WASHINGTON
15588
REGISTERED
PROFESSIONAL ENGINEER
EXPIRES JULY 1, 2007

NOTE: THIS PLAN IS NOT A LEGAL ENGINEERING DOCUMENT BUT AN ELECTRONIC DUPLICATE. THE ORIGINAL, SIGNED BY THE ENGINEER AND APPROVED FOR PUBLICATION, IS KEPT ON FILE AT THE WASHINGTON STATE DEPARTMENT OF TRANSPORTATION. A COPY MAY BE OBTAINED UPON REQUEST.

DRYWELL TYPE 1 (FOR SWALE)

STANDARD PLAN B-20.20-01

SHEET 1 OF 1 SHEET

APPROVED FOR PUBLICATION

Kevin J. Dayton 11-21-06

STATE DESIGN ENGINEER — DATE

Washington State Department of Transportation

DRAWN BY: ADAM COCHRAN

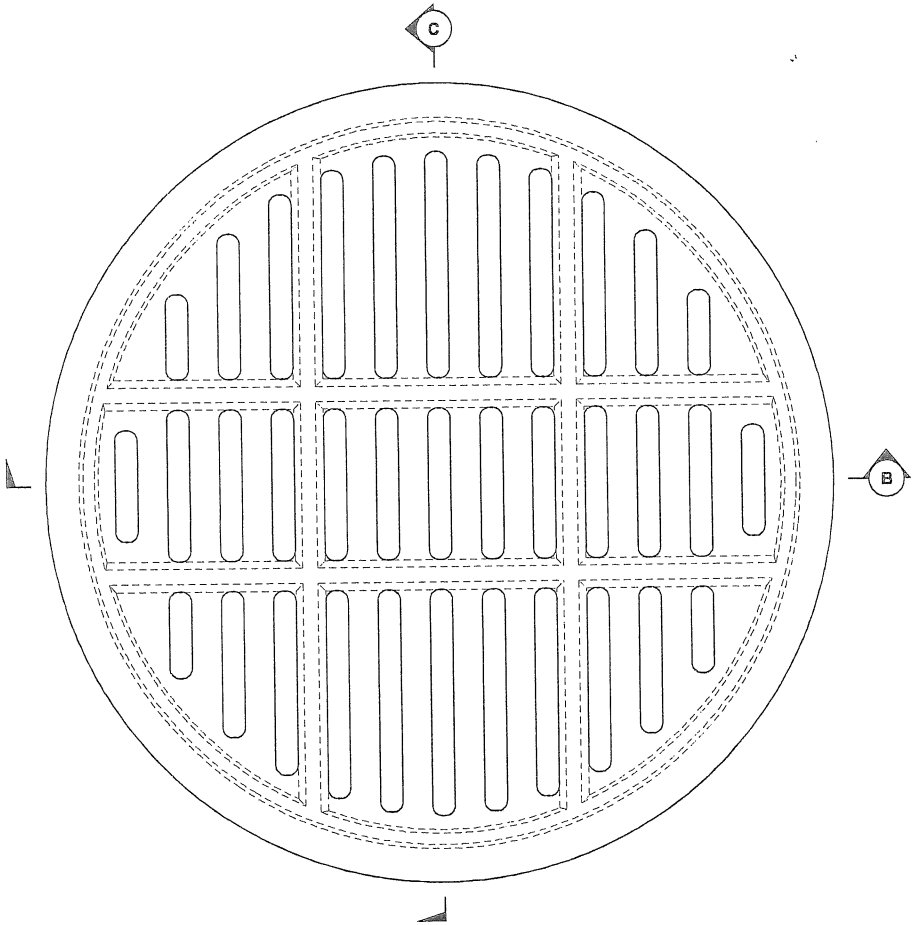

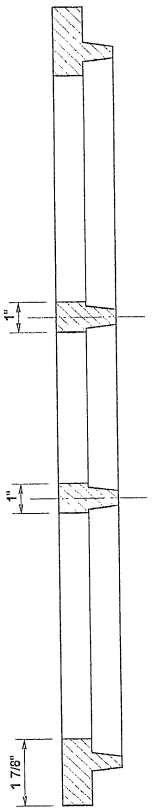

SECTION C

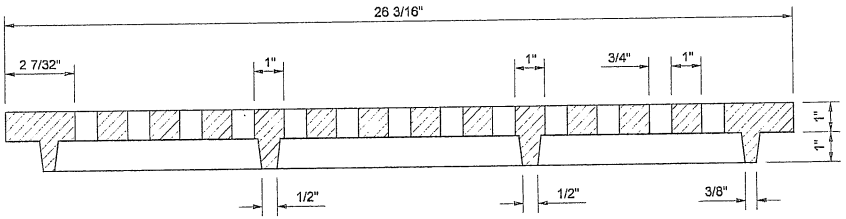

SECTION B

NOTES

1. For use with Circular Frames (rings) detailed in Standard Plan B-30.70.
2. Slotted Manhole Covers are intended for use with Drywells only. See Standard Plans B-20.20 and B-20.60.

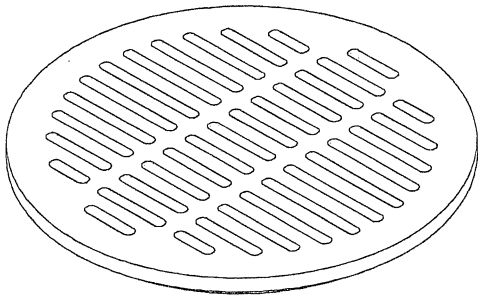

ISOMETRIC VIEW

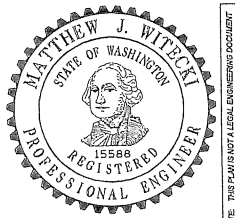

EXPIRES JULY 1, 2007

NOTE: THIS PLAN IS NOT A LEGAL ENGINEERING DOCUMENT BUT AN ELECTRONIC DUPLICATE. THE ORIGINAL, SIGNED BY THE ENGINEER AND APPROVED FOR PUBLICATION, IS KEPT ON FILE AT THE WASHINGTON STATE DEPARTMENT OF TRANSPORTATION. A COPY MAY BE OBTAINED UPON REQUEST.

CIRCULAR GRATE

STANDARD PLAN B-30.80-00

SHEET 1 OF 1 SHEET

APPROVED FOR PUBLICATION

Harold J. Peterfeso — STATE DESIGN ENGINEER

06-08-06 — DATE

Washington State Department of Transportation

DRAWN BY: LISA CYFORD

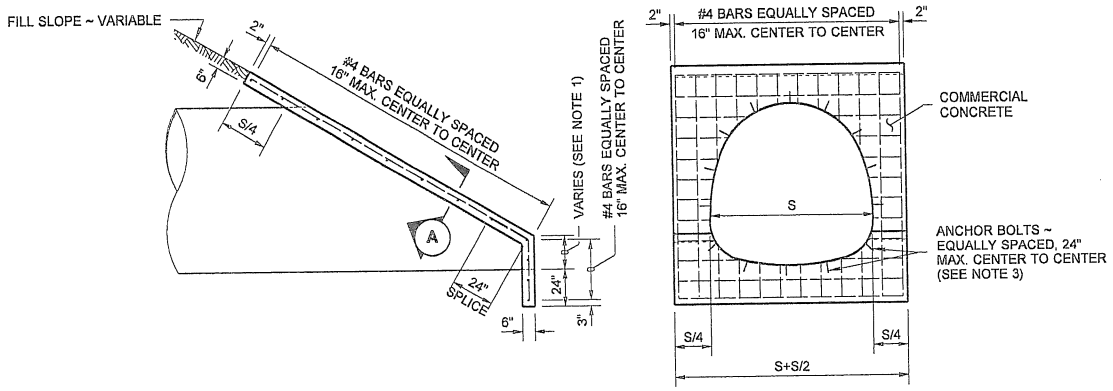

STRUCTURAL PLATE PIPE ARCHES AND UNDERPASSES

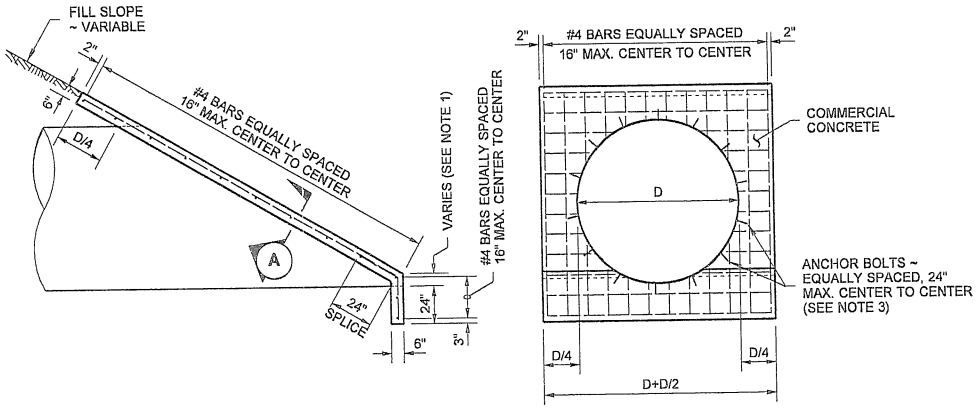

STEP MITERED PIPE

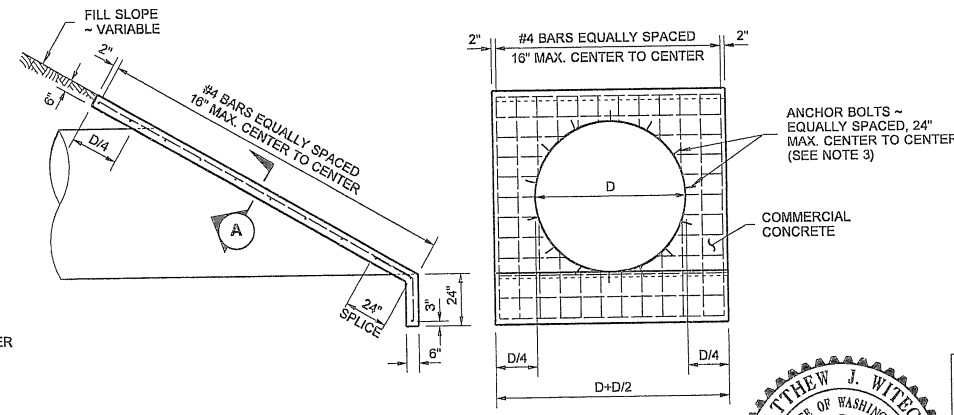

FULL MITERED PIPE

PIPES AND STRUCTURAL PLATE PIPES

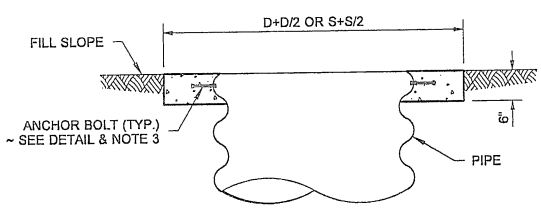

SECTION A

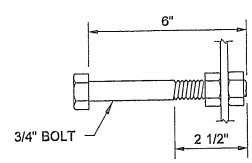

ANCHOR BOLT DETAIL

NOTES

1. The variable dimension indicated for the height of step for step mitered pipes shall conform to the manufacturers recommendations unless specified differently on the plans or in the Special Provisions.
2. Reinforcing steel shall have 1 1/2" min. clear cover to all concrete surfaces.
3. Headwalls for concrete culvert pipe may omit anchor bolt attachment.
4. When steel pipe safety bars ar used, headwall thickness shall be increased to 8".

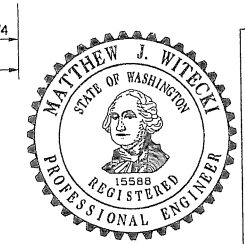

EXPIRES JULY 1, 2009

NOTE: THIS PLAN IS NOT A LEGAL ENGINEERING DOCUMENT BUT AN ELECTRONIC DUPLICATE. THE ORIGINAL SIGNED BY THE ENGINEER AND APPROVED FOR PUBLICATION, IS KEPT ON FILE AT THE WASHINGTON STATE DEPARTMENT OF TRANSPORTATION. A COPY MAY BE OBTAINED UPON REQUEST.

HEADWALLS FOR CULVERT PIPE AND UNDERPASS

STANDARD PLAN B-75.20-01

SHEET 1 OF 1 SHEET

APPROVED FOR PUBLICATION

Pasco Bakotich III — 06-10-08

STATE DESIGN ENGINEER — DATE

Washington State Department of Transportation

DRAWN BY: FERN LIDDELL

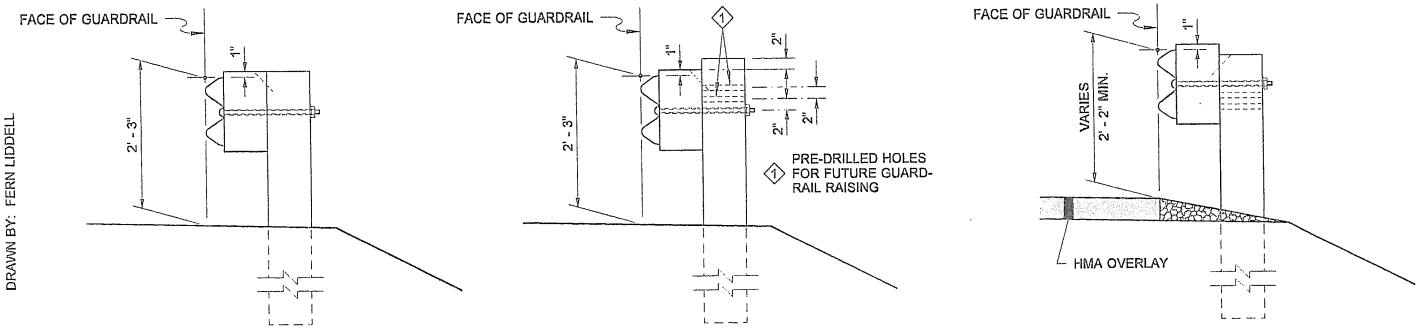

TYPE 1 ALTERNATIVE

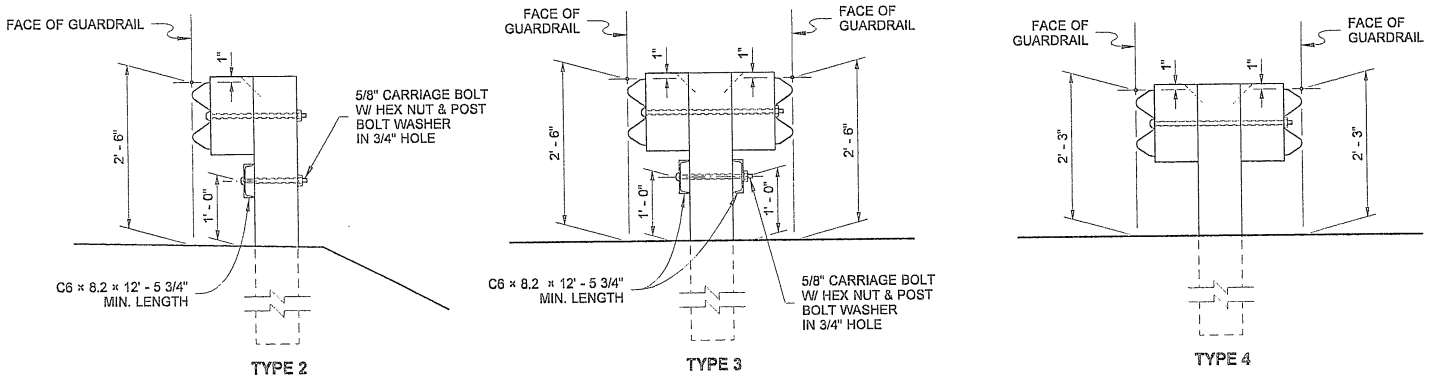

NOTES

1. When required by the Contract, a Snow Load Post Washer shall be used on the backside of the post (in lieu of the 1 3/4" Post Bolt Washer) and a Snow Load Rail Washer shall be placed on the face side of Beam Guardrail Types 1 and 2. Snow Load Rail Washers shall not be installed on terminals.
2. Rail Washers, also called "Snow Load Rail Washers" are not required on new installation except as called for in Note 1. Unnecessary Rail washers need not be removed from existing installations, except those on posts 2 through 8 of a BCT installation shall be removed.
3. Beam Guardrail post spacing for Types 1 through 4 shall be 6' - 3" on centers.
4. Timber blocks shall be toe-nailed to the post with a16d galvanized nail to prevent block rotation.
5. For post and block details, see **Standard Plan C-1b.**
6. When "Beam Guardrail Type - ___ Ft. Long Post" is specified in the Contract, the post length shall be stamped with numbers, 1 1/2" min. high and 3/4" wide at the location where the letter "H" is shown in the ASSEMBLY DETAIL. For wood post applications, the letter shall be stamped to a minimum depth of 1/4". For steel post applications, the letter shall be legible after the post is galvanized. After post installation, it shall be the Contractor's responsibility to ensure that the stamped numbers remain visible.
7. Existing posts shall not be raised. Replace posts as necessary to achieve required guardrail height.

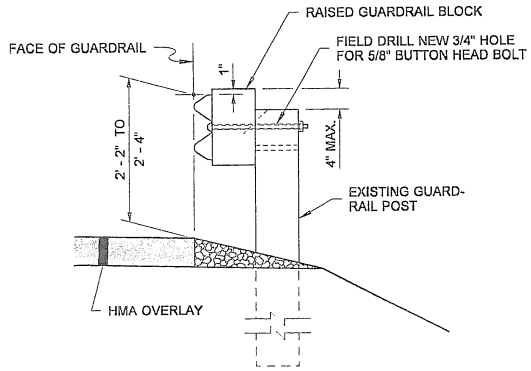

BEAM GUARDRAIL RAISING FOR HMA OVERLAYS

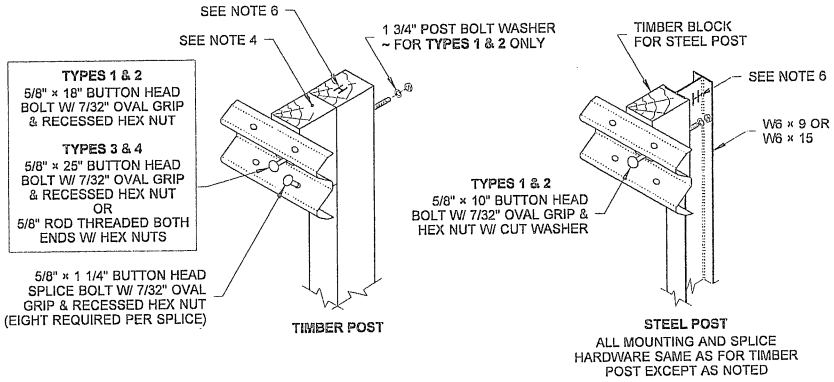

ASSEMBLY DETAIL

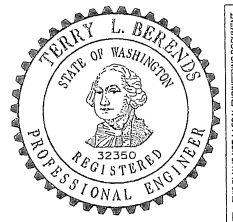

NOTE: THIS PLAN IS NOT A LEGAL ENGINEERING DOCUMENT BUT AN ELECTRONIC DUPLICATE. THE ORIGINAL, SIGNED BY THE ENGINEER AND APPROVED FOR PUBLICATION, IS KEPT ON FILE AT THE WASHINGTON STATE DEPARTMENT OF TRANSPORTATION. A COPY MAY BE OBTAINED UPON REQUEST.

BEAM GUARDRAIL TYPES 1 ~ 4 (W-BEAM) STANDARD PLAN C-1

SHEET 1 OF 2 SHEETS

APPROVED FOR PUBLICATION

Pasco Bakotich III — STATE DESIGN ENGINEER

06-16-11 — DATE

Washington State Department of Transportation

DRAWN BY: FERN LIDDELL

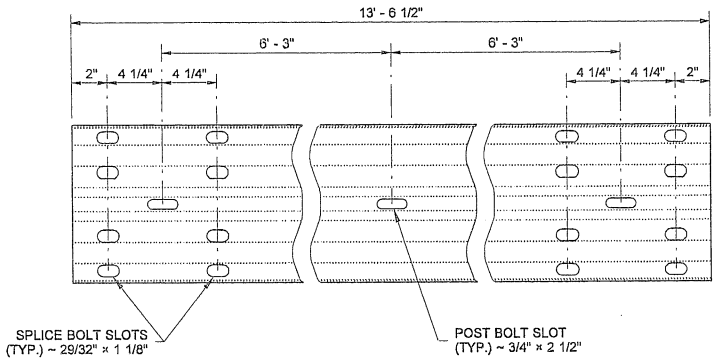

TYPICAL RAIL ELEMENT

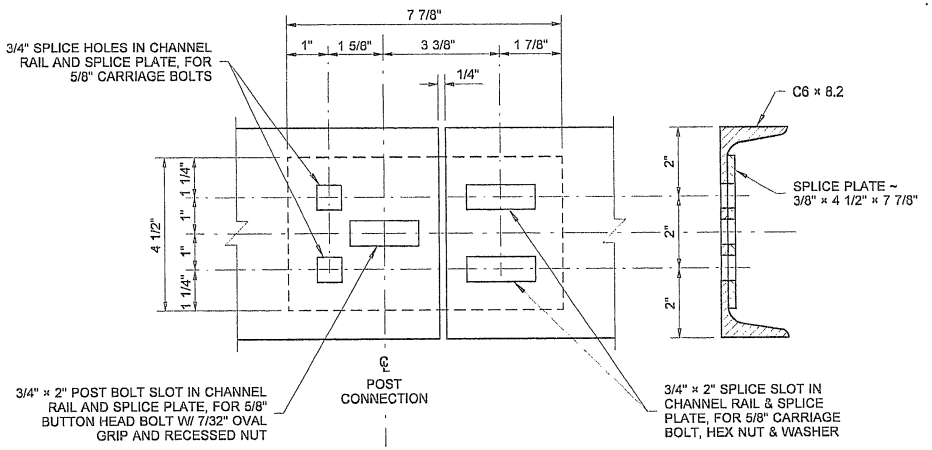

CHANNEL RAIL SPLICE

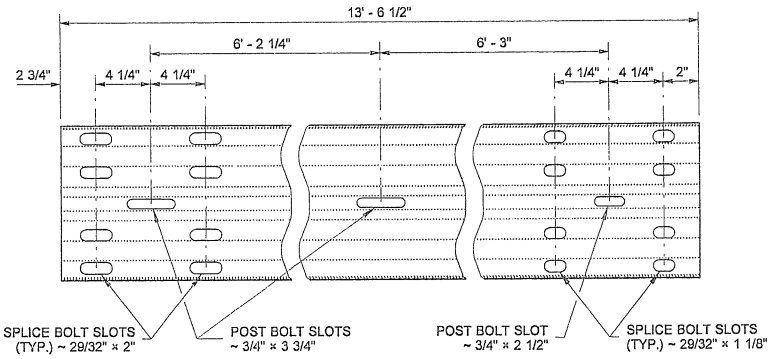

EXPANSION SECTION

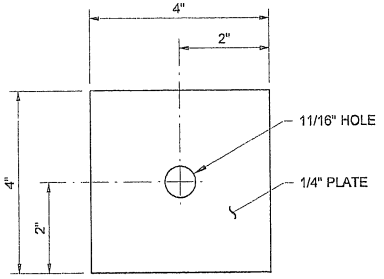

SNOW LOAD
POST WASHER
SEE NOTE 1

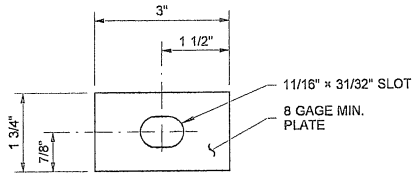

SNOW LOAD
RAIL WASHER
SEE NOTES 1 & 2

NOTE: THIS PLAN IS NOT A LEGAL ENGINEERING DOCUMENT BUT AN ELECTRONIC DEPLICATE. THE ORIGINAL, SIGNED BY THE ENGINEER AND APPROVED FOR PUBLICATION, IS KEPT ON FILE AT THE WASHINGTON STATE DEPARTMENT OF TRANSPORTATION. A COPY MAY BE OBTAINED UPON REQUEST.

BEAM GUARDRAIL
TYPES 1 ~ 4
(W-BEAM)
STANDARD PLAN C-1

SHEET 2 OF 2 SHEETS

APPROVED FOR PUBLICATION

Pasco Bakotich III — *06-16-11*
STATE DESIGN ENGINEER — DATE

Washington State Department of Transportation

DRAWN BY: MARK SUJKA

NOTES

1. See Standard Plan C-1b for additional details.
2. One-way traffic layouts are identical to the two-way layout with the exception that only the posts trailing the span need to be CRT's with double blocks.

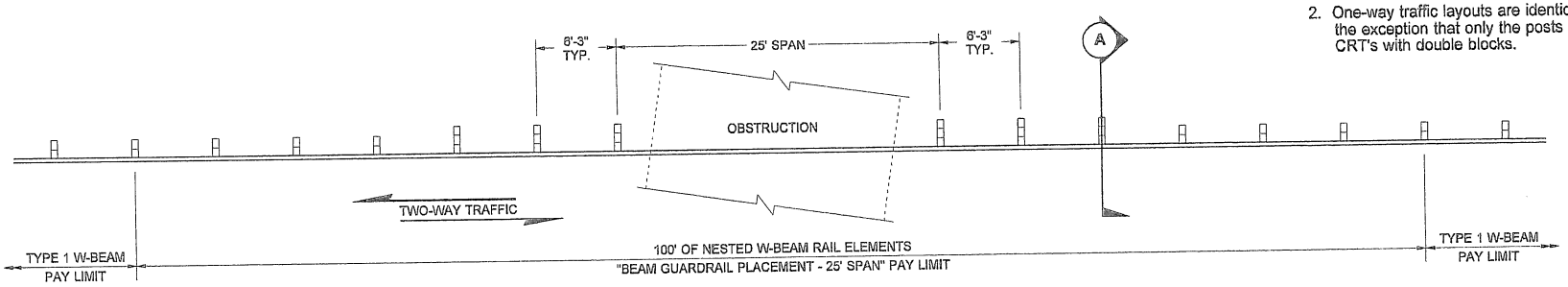

PLAN

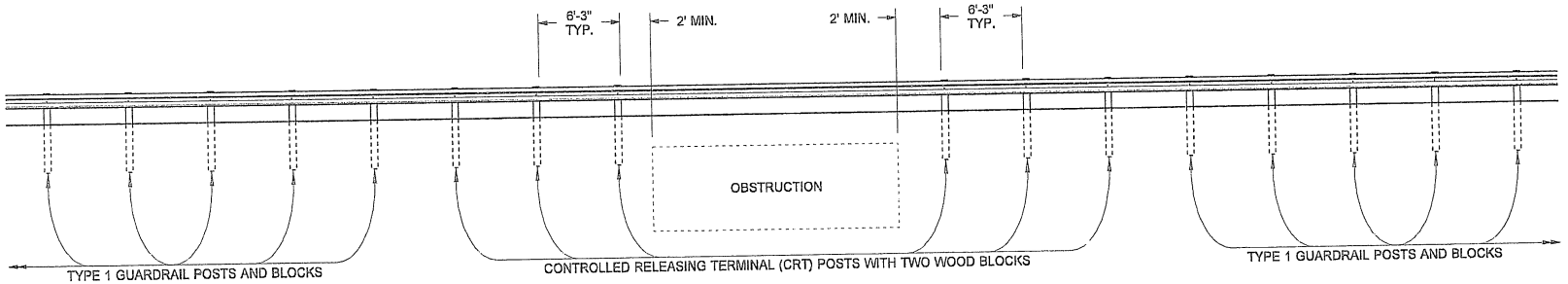

ELEVATION

CASE 21

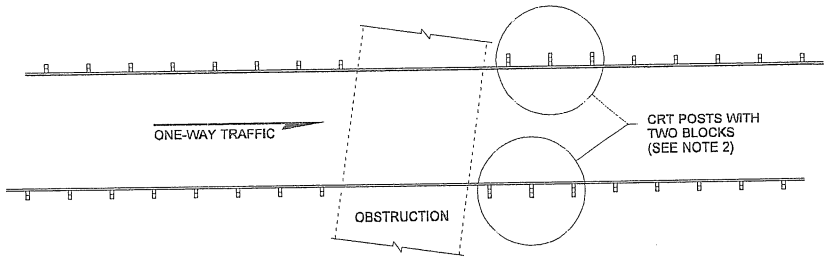

ONE-WAY TRAFFIC LAYOUT

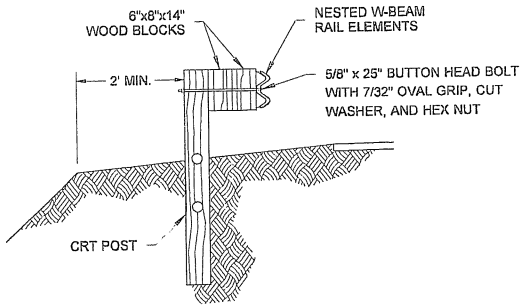

SECTION A

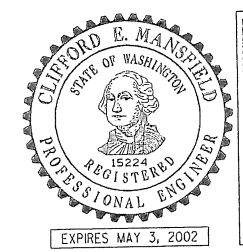

NOTE: THIS PLAN IS NOT A LEGAL ENGINEERING DOCUMENT BUT AN ELECTRONIC DUPLICATE. THE ORIGINAL, SIGNED BY THE ENGINEER AND APPROVED FOR PUBLICATION, IS KEPT ON FILE AT THE WASHINGTON STATE DEPARTMENT OF TRANSPORTATION. A COPY MAY BE OBTAINED UPON REQUEST.

GUARDRAIL PLACEMENT 25' SPAN

STANDARD PLAN C-2o

APPROVED FOR PUBLICATION

Clifford E. Mansfield — 07-13-01

STATE DESIGN ENGINEER — DATE

Washington State Department of Transportation

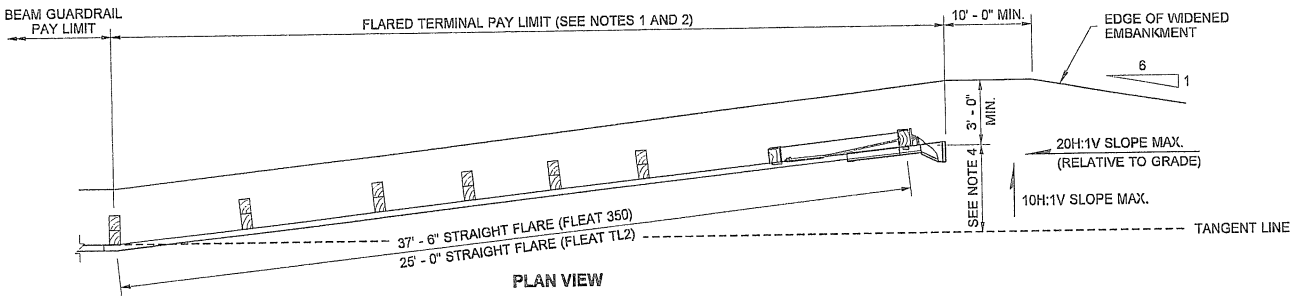

PLAN VIEW

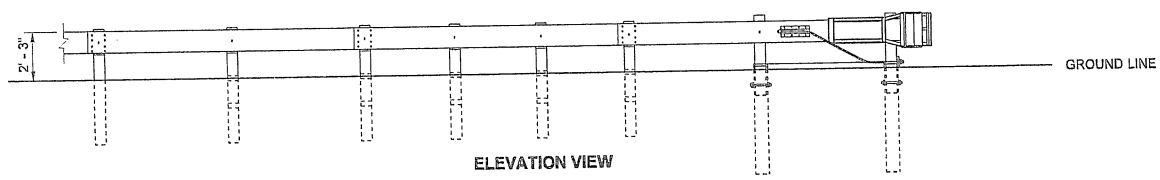

ELEVATION VIEW

FLEAT OPTION

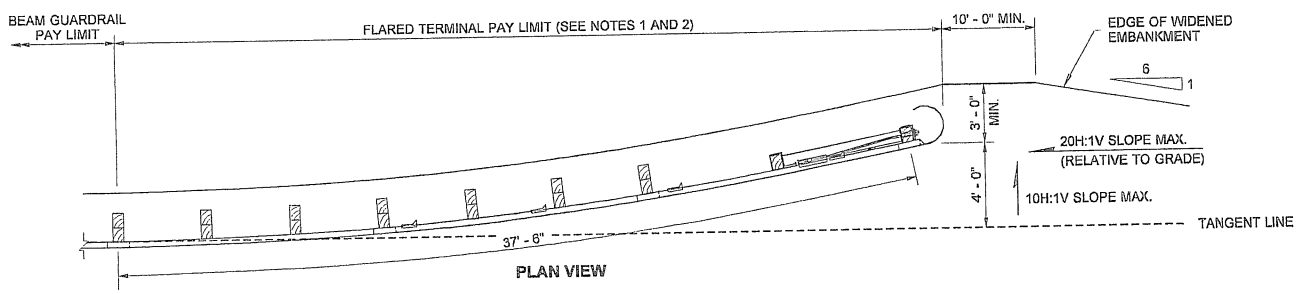

PLAN VIEW

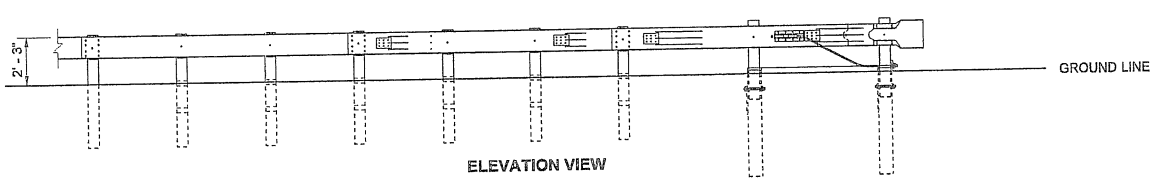

ELEVATION VIEW

SRT OPTION

NOTES

1. Unless otherwise indicated in the contract, the SRT - 350 (12.5, 8 Post) as manufactured by Trinity Industries, Inc., or a FLEAT 350 as manufactured by Road Systems Inc., shall be installed per manufacturer's recommendations. If specified in the Contract, the FLEAT TL2 as manufactured by Road Systems, Inc. shall be installed per manufacturers recommendations.
2. Where terminal is placed on a curve, and post offsets would result in the rail encroaching onto the shoulder (e.g., the inside of a curve), the posts shall be installed so that the faceof the rail is at the edge of the shoulder.
3. When snow load post washers and snow load rail washers are called for in the contract, the snow load rail washers must be omitted within the terminal limits.
4. Offset distances:
   FLEAT 350 ..... 4' - 0"
   FLEAT TL2 ..... 1' - 8" minimum

RICHARD BARSTOW ALBIN
STATE OF WASHINGTON
34042
REGISTERED
PROFESSIONAL ENGINEER

EXPIRES JULY 24, 2006

NOTE: THIS PLAN IS NOT A LEGAL ENGINEERING DOCUMENT BUT AN ELECTRONIC DUPLICATE. THE ORIGINAL, SIGNED BY THE ENGINEER AND APPROVED FOR PUBLICATION, IS KEPT ON FILE AT THE WASHINGTON STATE DEPARTMENT OF TRANSPORTATION. A COPY MAY BE OBTAINED UPON REQUEST.

BEAM GUARDRAIL FLARED TERMINAL

STANDARD PLAN C-4b

SHEET 1 OF 1 SHEET

APPROVED FOR PUBLICATION

Harold J. Peterfeso — STATE DESIGN ENGINEER
06-08-06 — DATE

Washington State Department of Transportation

DATE	REVISION	BY
04/2006	Revised FLEAT Flare Lengths	AMC

NOTES

1. An ET-PLUS (TL3) as manufactured by Trinity Industries, Inc. or an SKT-350 as manufactured by Road Systems Inc. shall be installed according to manufacturer's recommendations. When a TL2 terminal is specified in the contract an ET-PLUS (TL2) as manufactured by Trinity Industries, Inc., or an SKT-TL2 as manufactured by Road Systems, Inc. shall be installed according to manufacturer's recommendations.
2. A reflectorized object marker shall be installed according to manufacturer's recommendations.
3. When snow load post washers and snow load rail washers are required by the contract, the snow load rail washers must not be installed within the terminal limits.
4. Terminal shall be installed at a taper, ensuring that end piece is entirely off shoulder.
5. Length for ET-PLUS (TL3) and SKT-350 is 50'. Length for ET-PLUS (TL2) and SKT-TL2 is 25'.

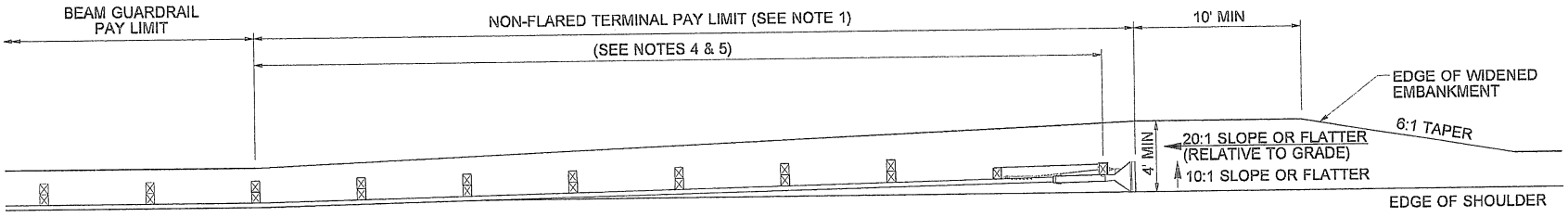

PLAN

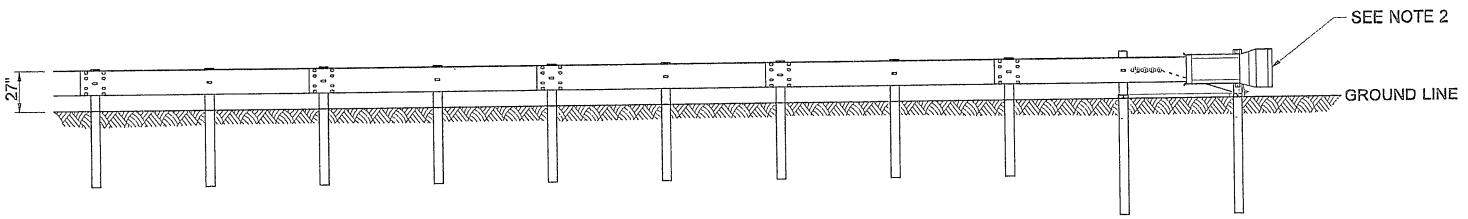

ELEVATION

RICHARD BARSTOW ALBIN
STATE OF WASHINGTON
34042
REGISTERED
PROFESSIONAL ENGINEER

EXPIRES JULY 24, 2004

NOTE: THIS PLAN IS NOT A LEGAL ENGINEERING DOCUMENT BUT AN ELECTRONIC COPY OF THE ORIGINAL DOCUMENT THAT WAS SIGNED AND APPROVED FOR PUBLICATION. IS KEPT ON FILE AT THE WASHINGTON STATE DEPARTMENT OF TRANSPORTATION. A COPY MAY BE OBTAINED UPON REQUEST.

BEAM GUARDRAIL NON-FLARED TERMINAL

STANDARD PLAN C-4e

SHEET 1 OF 1 SHEET

APPROVED FOR PUBLICATION

Harold J. Peterfeso — STATE DESIGN ENGINEER — *02-20-03* DATE

Washington State Department of Transportation

DATE	REVISION	BY
01/2003	REVISED NOTES 1 & 5; ADDED SLOPES.	RG

DRAWN BY: BILL BERENS

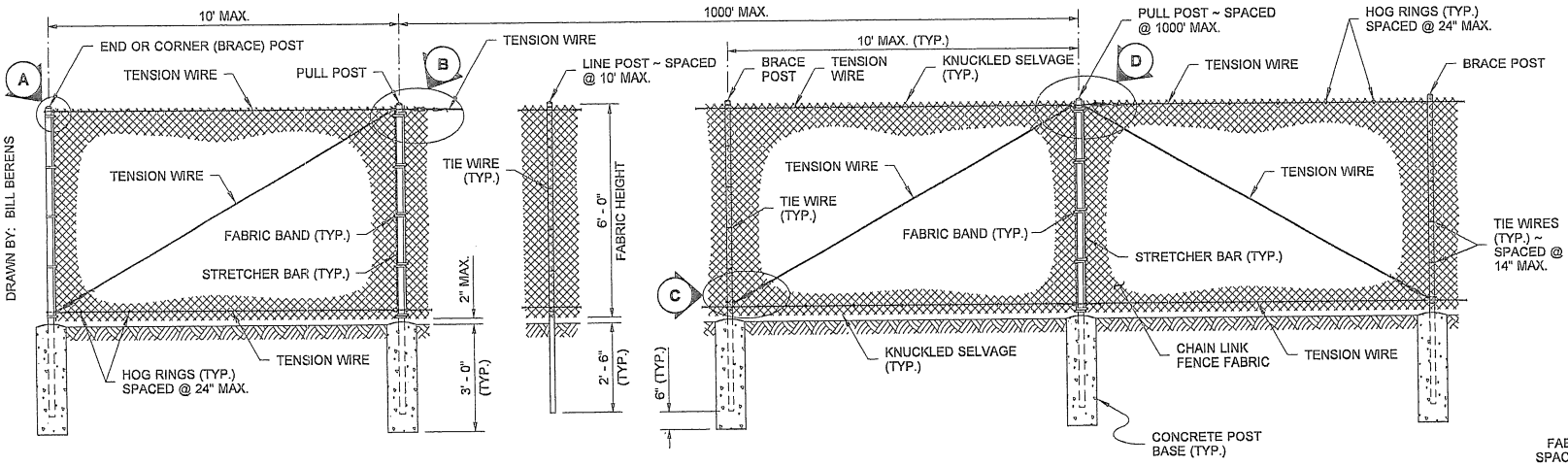

TYPE 3

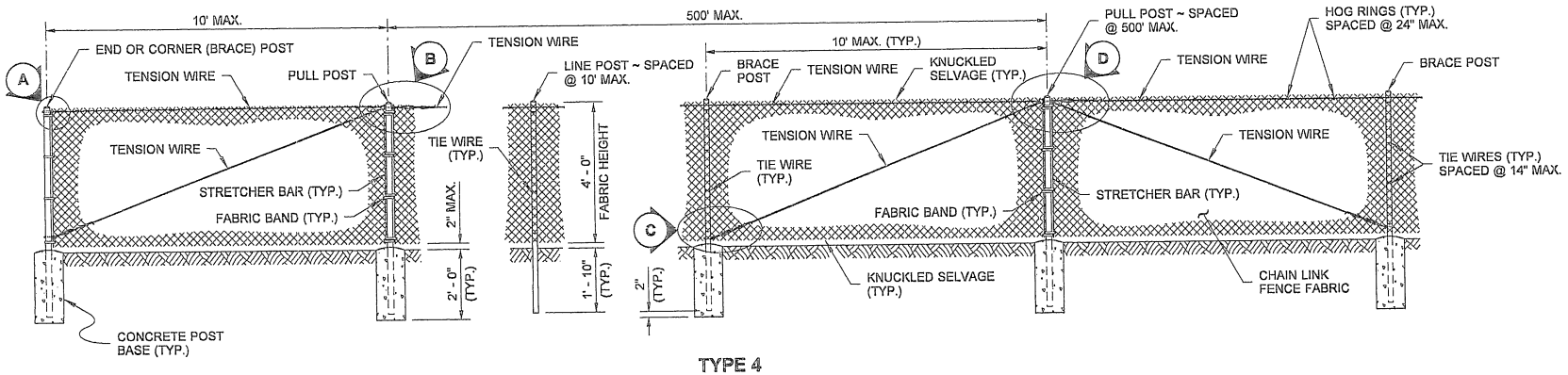

TYPE 4

NOTES

1. All concrete post bases shall be 10" minimum diameter.
2. Along the top and bottom, using Hog Rings, fasten the Chain Link Fence Fabric to the Tension Wire within the limits of the first full fabric weave.
3. Details are illustrative and shall not limit hardware design or post selection of any particular fence type.

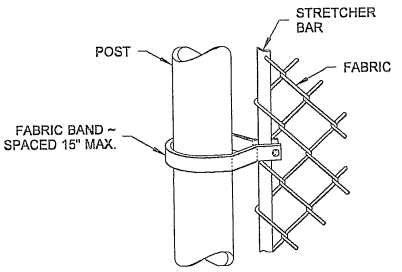

METHOD OF FASTENING STRETCHER BAR TO POST
(SHOWN FOR ROUND POST)

POST AND RAIL SPECIFICATIONS				
POST	PIPE	ROLL FORMED		H - COLUMN
	NOM. SIZE (SCH. 40) I.D.	SECTION	WEIGHT (lb/ft)	WEIGHT (lb/ft)
END, CORNER, OR PULL POST	2 1/2" DIAM.	Y	5.10	
LINE OR BRACE POST	2" DIAM.	Z	1.85	3.26

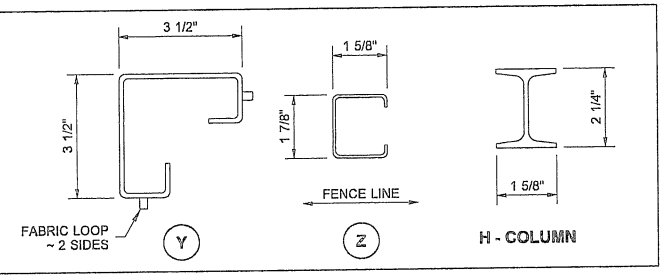

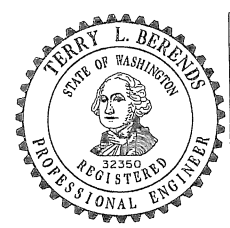

NOTE: THIS PLAN IS NOT A LEGAL ENGINEERING DOCUMENT BUT AN ELECTRONIC DUPLICATE. THE ORIGINAL, SIGNED BY THE ENGINEER AND APPROVED FOR PUBLICATION, IS KEPT ON FILE AT THE WASHINGTON STATE DEPARTMENT OF TRANSPORTATION. A COPY MAY BE OBTAINED UPON REQUEST.

CHAIN LINK FENCE TYPES 3 AND 4

STANDARD PLAN L-20.10-01

SHEET 1 OF 2 SHEETS

APPROVED FOR PUBLICATION

Pasco Bakotich III — 06-16-11
STATE DESIGN ENGINEER — DATE

Washington State Department of Transportation

DRAWN BY: BILL BERENS

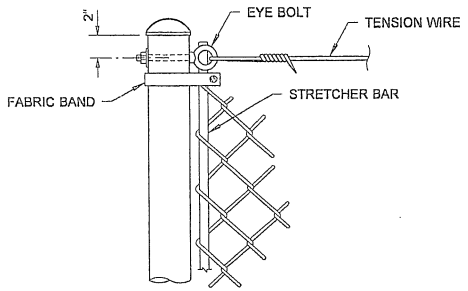

END OR CORNER (BRACE) POST

DETAIL (A)

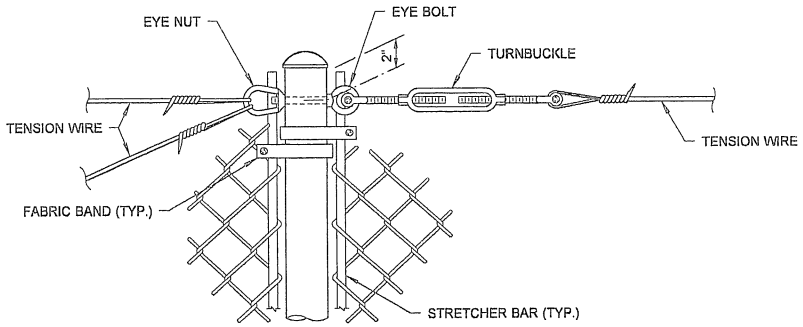

PULL POST (AT END OR CORNER)

DETAIL (B)

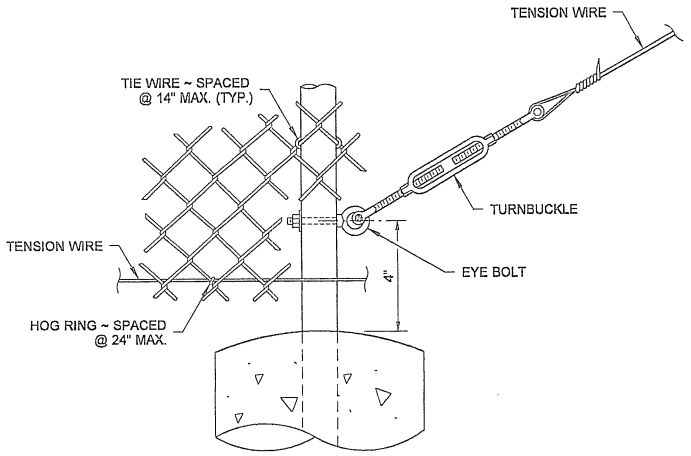

BRACE POST

DETAIL (C)

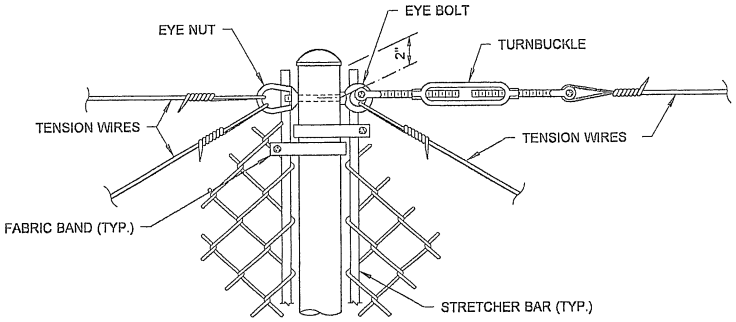

PULL POST (WITHIN RUN)

DETAIL (D)

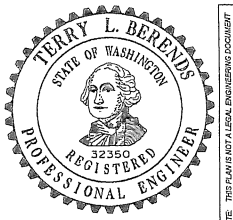

NOTE: THIS PLAN IS NOT A LEGAL ENGINEERING DOCUMENT BUT AN ELECTRONIC DUPLICATE. THE ORIGINAL, SIGNED BY THE WASHINGTON STATE REGISTERED ENGINEER, IS ON FILE AT THE WASHINGTON STATE DEPARTMENT OF TRANSPORTATION. A COPY MAY BE OBTAINED UPON REQUEST.

CHAIN LINK FENCE TYPES 3 AND 4

STANDARD PLAN L-20.10-01

SHEET 2 OF 2 SHEETS

APPROVED FOR PUBLICATION

Pasco Bakotich III — STATE DESIGN ENGINEER

06-16-11 — DATE

Washington State Department of Transportation

DRAWN BY: MARK SUJKA

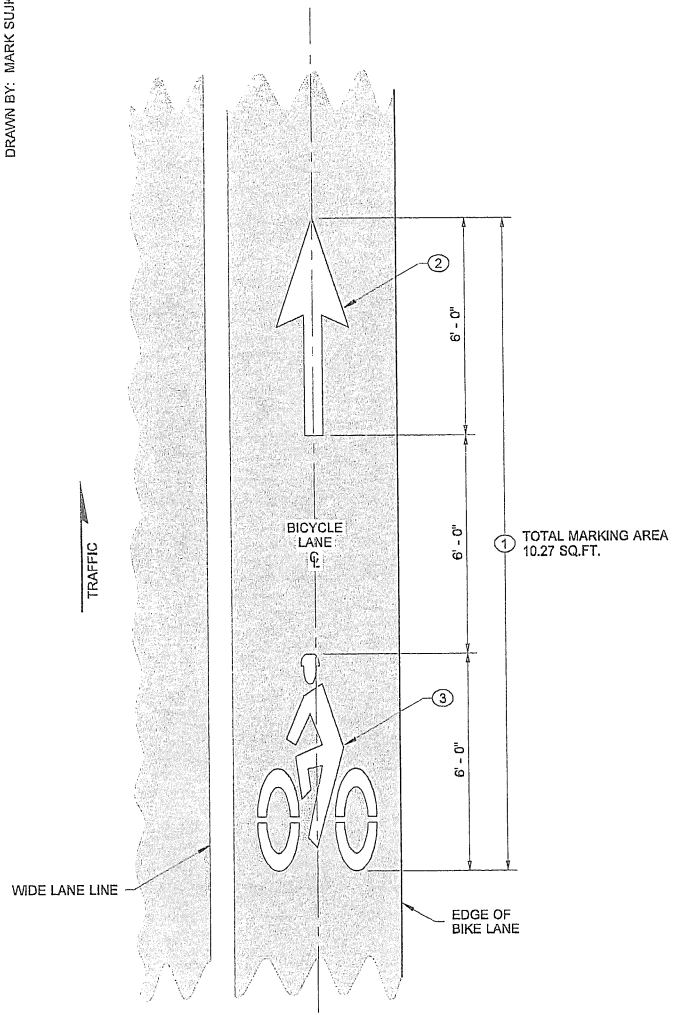

BICYCLE LANE SYMBOL LAYOUT

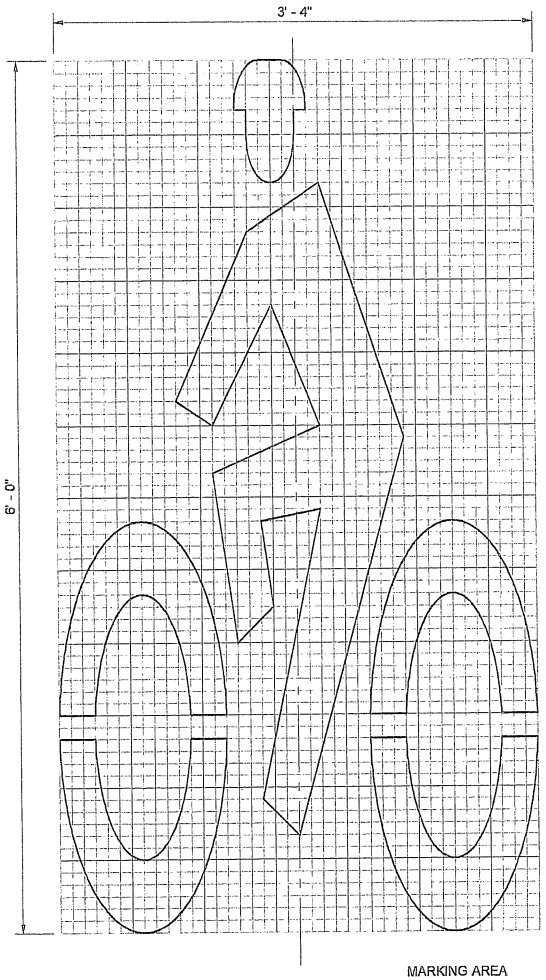

BIKE RIDER SYMBOL DETAIL

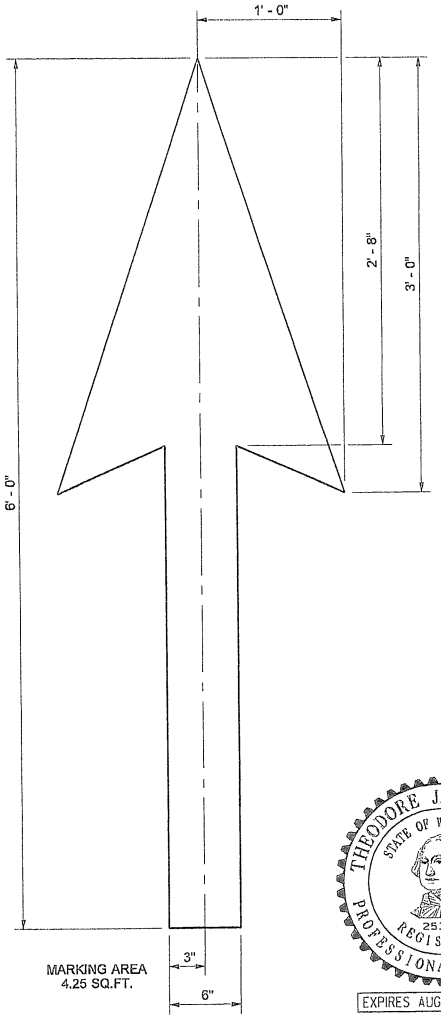

BIKE LANE ARROW DETAIL

KEY NOTES

1. Bid Item "Bicycle Lane Symbol" includes Bike Lane Arrow and Bike Rider Symbol.
2. 2' x 6' White Bike Lane Arrow
3. Bike Rider Symbol

GENERAL NOTE

See contract for location and material requirements.

THEODORE J. TREPANIER
STATE OF WASHINGTON
25335
REGISTERED
PROFESSIONAL ENGINEER
EXPIRES AUGUST 9, 2007

NOTE: THIS PLAN IS NOT A LEGAL ENGINEERING DOCUMENT BUT AN ELECTRONIC DUPLICATE. THE ORIGINAL, SIGNED BY THE ENGINEER, AND APPROVED FOR PUBLICATION, IS KEPT ON FILE AT THE WASHINGTON STATE DEPARTMENT OF TRANSPORTATION. A COPY MAY BE OBTAINED UPON REQUEST.

BICYCLE LANE SYMBOL LAYOUT

STANDARD PLAN M-9.50-01

SHEET 1 OF 1 SHEET

APPROVED FOR PUBLICATION

Ken L. Smith — 01-30-07

STATE DESIGN ENGINEER — DATE

Washington State Department of Transportation