APPROVED BY:

BENTON COUNTY ENGINEER — DATE 10/3/11

CHAIRMAN OF THE BOARD OF COUNTY COMMISSIONERS — DATE 10-4-2011

CLERK OF THE BOARD OF COUNTY COMMISSIONERS — DATE 10/4/2011

COLUMBIA IRRIGATION DISTRICT — DATE 9/27/11

CID CANAL REALIGNMENT/CE 1619 CRP
BENTON COUNTY PUBLIC WORKS DEPARTMENT

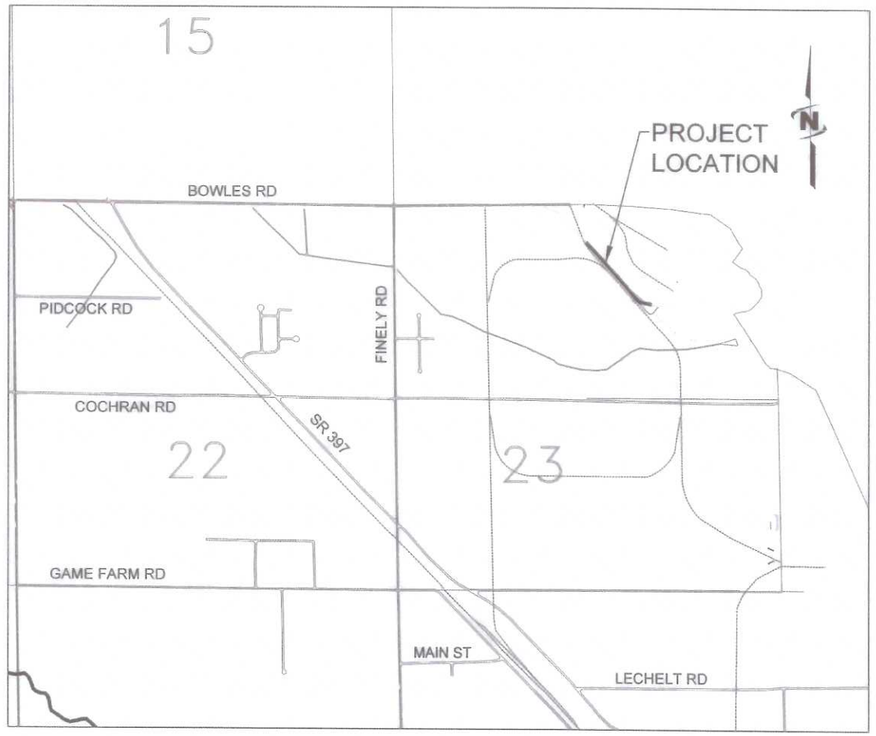

LOCATION MAP
NTS

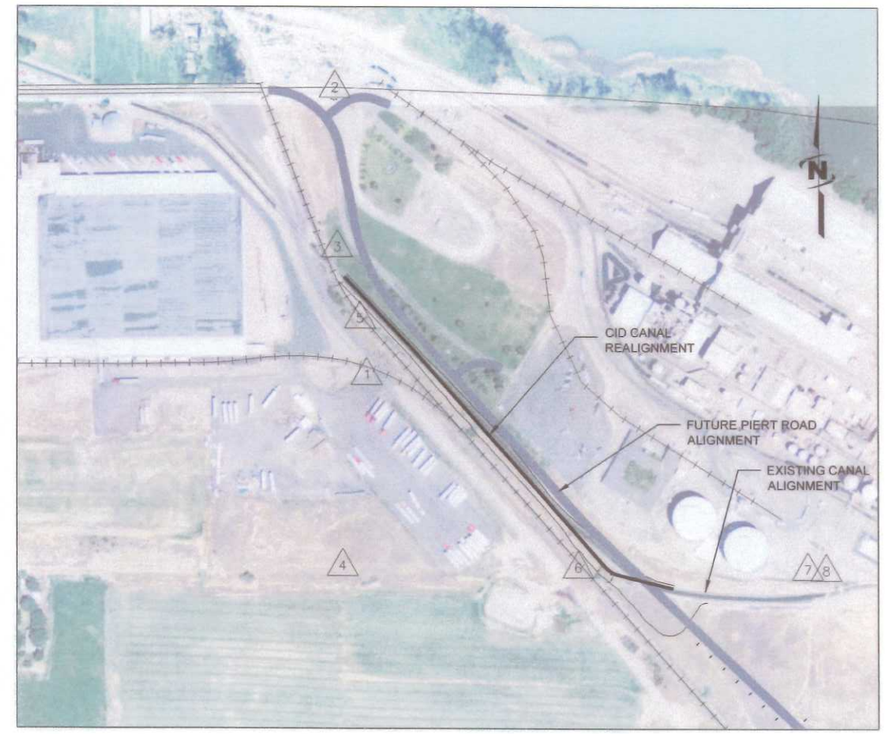

CONSTRUCTION CONTROL MAP
NTS

SHEET LIST TABLE	
SHEET NUMBER	SHEET TITLE
1	COVER SHEET
2	PLAN & PROFILE STA. 9+87 TO STA. 13+50
3	PLAN & PROFILE STA. 13+50 TO STA. 18+25
4	PLAN & PROFILE STA. 18+25 TO STA. 22+86
5	ROADWAY C
6	CROSS SECTIONS STA. 9+87 TO STA. 15+00
7	CROSS SECTION STA. 16+00 TO STA. 22+86
8	DETAIL SHEET
9	DETAIL SHEET

SEPTEMBER 2011

J-U-B Engineers • Surveyors • Planners

J-U-B ENGINEERS, Inc.
2810 W. Clearwater Avenue
Suite 201
Kennewick, Washington 99336
Phone: 509.783.2144
Fax: 509.736.0790
www.jub.com

SURVEY CONTROL POINTS				
NUMBER	NORTHING	EASTING	ELEVATION	DESCRIPTION
1	407195.43	2114769.43	361.31	PK NAIL – COLSTOR
2	407992.67	2114681.25	362.32	5/8" PIN – WORLEY
3	407548.69	2114688.56	365.09	5/8" PIN – STRATTON
4	406666.93	2114702.60	354.92	5/8" PIN – STRATTON
5	407352.15	2114751.15	362.23	5/8" PIN – STRATTON
6	406661.99	2115359.21	358.04	5/8" PIN – STRATTON
7	406657.57	2115998.64	364.31	5/8" PIN – STRATTON
8	406654.19	2116038.46	365.09	5/8" PIN – STRATTON

Plot Date:9/28/2011 8:22 AM Plotted By: Michael Harvey
Date Created:4/26/2011 \\NWFILES\PUBLIC\PROJECT\03-04-051 - PIERT ROAD EXTENSION-01 DESIGN\CAD\SHEET\CID CANAL REALIGNMENT\03-04-051_CID_C-001.DWG

ALIGNMENT CURVE DATA							
CURVE NO.	PI STA.	DEGREE	DELTA	LENGTH	RADIUS	TANGENT	CHORD BEARING
C-1	11+80.00	76°23'40"	34°34'38"	45.26'	75.00'	23.34'	N58°59'11"W

T8N, R30E, SEC.23

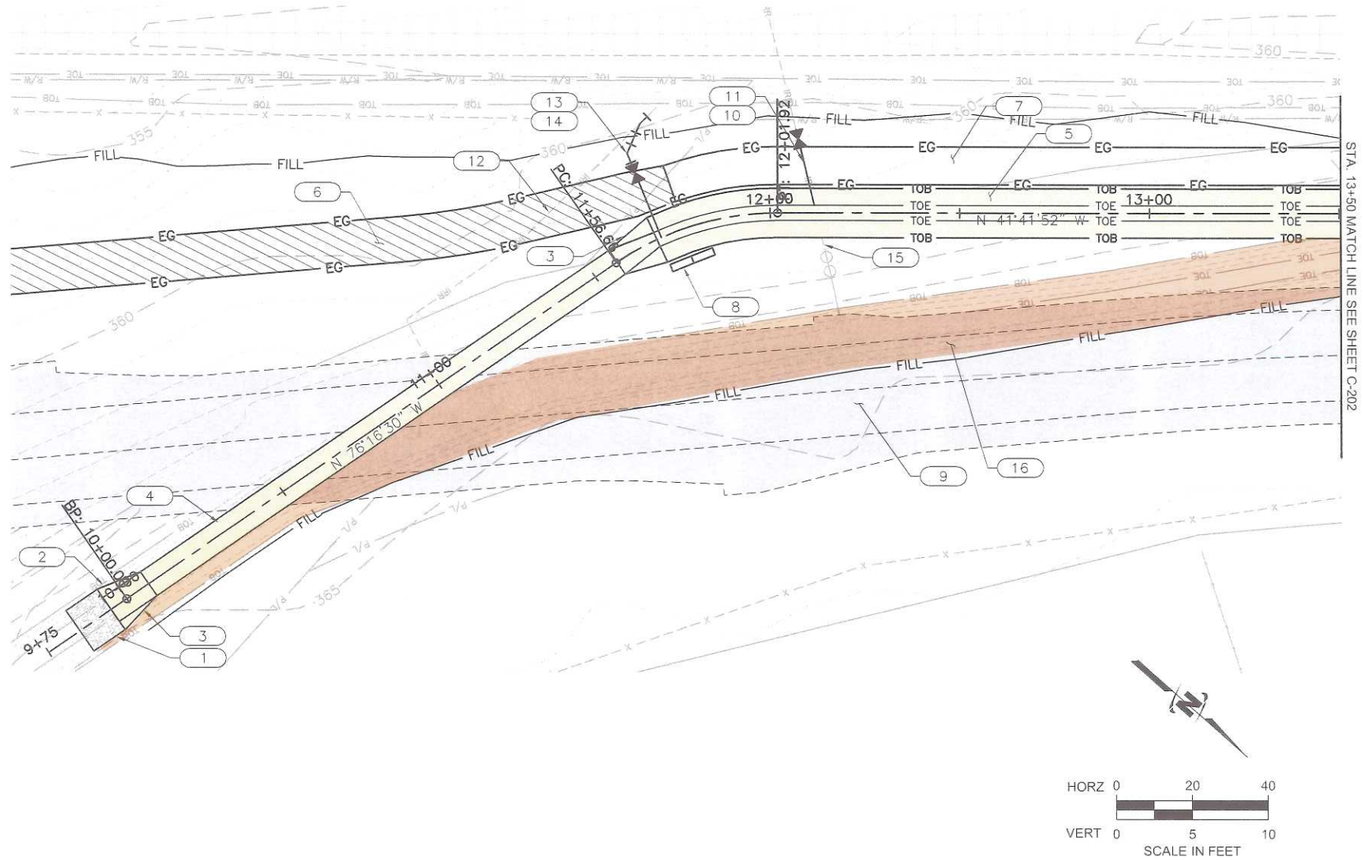

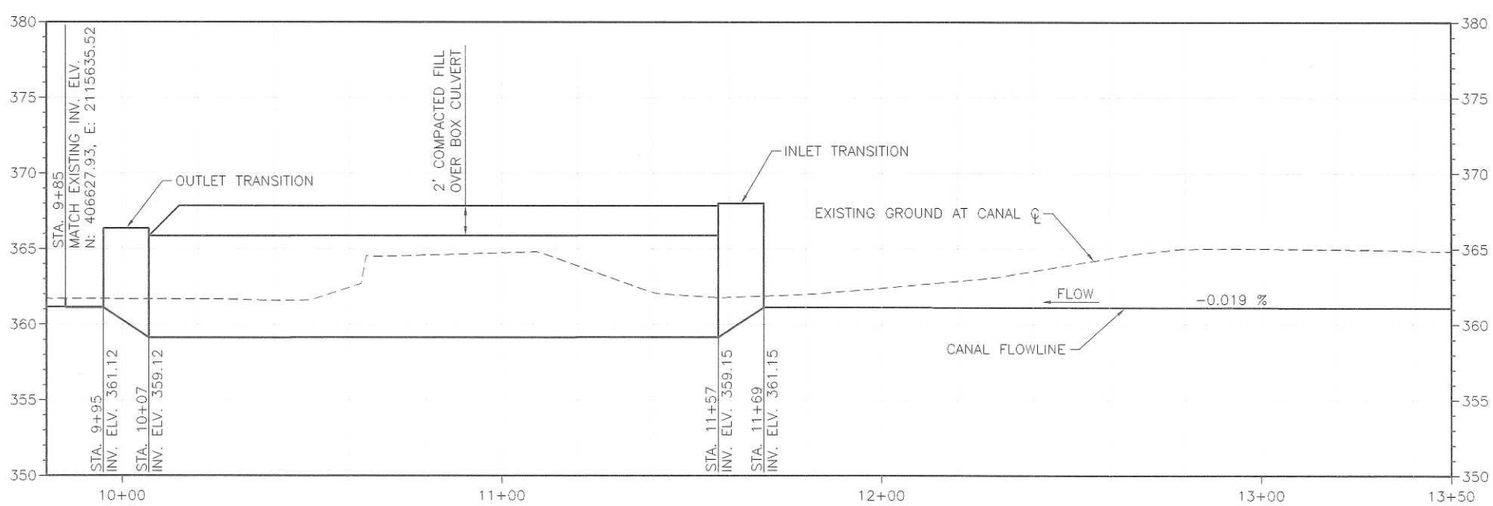

KEYED NOTES:

1. ±12" DEPTH OF QUARRY SPALLS COMPACTED TO BE UNIFORMLY DENSE AND UNYIELDING. (APPROX. 6 C.Y.) QUARRY SPALLS SHALL MEET THE GRADATION SHOWN IN SECTION 9-13.6
2. CUT OFF WALL, SEE 3/8, STA. 9+95
3. 12' LONG CONCRETE TRANSITION AT BOX CULVERT, SEE SHEET 9
4. 150' L.F. OF BOX CULVERT, SEE 8/8
5. CONCRETE LINED CANAL, ±183 L.F., SEE 6/8
6. ROADWAY C, SEE SHEET C-204
7. ACCESS ROAD ±181 L.F., SEE 1/8
8. 12' L.F. GRAVITY BLOCK WALL, SEE 5/8
9. FUTURE PIERT ROAD BY OTHERS
10. INSTALL ±20 L.F., 6" PVC C-900, CLASS 165 PIPE WITH JOINTS AS REQUIRED TO CONNECT TO EXISTING 6" PVC PIPE. INSTALL 6" VALVE. CONNECT TO EXISTING PIPE WITH A TRANSITION COUPLING.
11. SERVICE #2, SEE 9/8
12. REMOVE ±100 L.F. OF EXISTING 6" PVC PIPE (PARTIALLY LOCATED ABOVE GROUND).
13. SERVICE #1, SEE 9/8
14. INSTALL 6" VALVE. INSTALL ±30 L.F., 6" PVC C-900, CLASS 165 PIPE WITH FITTINGS AS REQUIRED TO CONNECT TO EXISTING 6" PVC PIPE.
15. REMOVE EXISTING 6" PVC PIPE (±60 L.F.)
16. BACKFILL EXISTING CANAL. FILL MATERIAL SHALL BE PLACED IN UNIFORM HORIZONTAL LIFTS NO THICKER THAN 8-INCHES IN LOOSE MEASUREMENT. EACH LIFT SHALL BE COMPACTED TO A MINIMUM OF 95% OF MAX. DENSITY IN ACCORDANCE WITH SECTION 2-03.3(14)D

CONSTRUCTION NOTES:

1. EXISTING UTILITIES, PIPING SIZES, MATERIALS, LOCATIONS AND ELEVATIONS ARE SCHEMATICALLY SHOWN IN AN APPROXIMATE WAY ONLY AND MAY VARY FROM THAT SHOWN. INFORMATION WAS OBTAINED FROM THE SITE, INFORMATION OF RECORD, AND INFORMATION PROVIDED TO J-U-B ENGINEERS, INC. THE CONTRACTOR SHALL DETERMINE THE EXACT LOCATION OF ALL EXISTING UTILITIES BEFORE COMMENCING WORK AND AGREES TO BE FULLY RESPONSIBLE FOR ANY AND ALL DAMAGES WHICH MIGHT BE OCCASIONED BY FAILURE TO EXACTLY LOCATE AND PRESERVE ANY AND ALL UNDERGROUND UTILITIES. QUANTITIES SHOWN ARE FOR BIDDING PURPOSES ONLY. THE CONTRACTOR SHALL BE RESPONSIBLE FOR CORRECT LENGTHS AND QUANTITIES.
2. REMOVE ALL EXISTING PIPING TO BE ABANDONED WHEN ENCOUNTERED IN TRENCHES OR STRUCTURAL EXCAVATION PRIOR TO BACKFILLING. CAP OR PLUG WITH CONCRETE ALL PIPES, CONDUITS, OR OTHER OPENINGS WHICH ARE CUT OR OPENED DURING EXCAVATION.
3. PROVIDE DETAILED "AS-BUILT" RECORDS SHOWING LOCATION, DEPTH, SIZE AND MATERIAL TYPE OF ALL PIPING CONSTRUCTED OR ENCOUNTERED DURING WORK.
4. ANY CHANGES OR MODIFICATIONS TO THE PROJECT PLANS SHALL FIRST BE APPROVED BY THE ENGINEER.
5. ALL DISTURBED AREAS SHALL BE HYDRO-SEEDED AT THE COMPLETION OF THE PROJECT.
6. CONTRACTOR SHALL RESTORE EXISTING LANDSCAPING THAT IS DISTURBED DURING CONSTRUCTION ACTIVITIES.

IRRIGATION SERVICE NOTES:

1. ALL FITTINGS SHALL BE ANCHORED USING CONCRETE THRUST BLOCKING IN A CCORDANCE WITH WSDOT STD. PLAN B-90.40.00
2. IRRIGATION PIPES SHALL BE AWWA C-900 PVC, CLASS 165
3. ALL IRRIGATION PIPE SHALL HAVE #14 INSULATED COPPER TRACER WIRE AND LOCATE TAPE INSTALLED.
4. ALL GATE VALVES SHALL HAVE RESILIENT SEATS AND MEET THE REQUIREMENTS OF AWWA C509. VALVES SHALL HAVE A 2" SQ. NUT OPERATOR. ALL VALVES SHALL BE PROVIDED WITH A TWO PIECE CAST IRON VALVE BOX.

811 Know what's below. Call before you dig.

J-U-B ENGINEERS, INC.
J-U-B ENGINEERS, INC.
2810 W. Clearwater Ave.
Suite 201
Kennewick, WA 99336
Phone: 509.783.2144
Fax: 509.736.0790
www.jub.com

BENJAMIN BUREN HAWKINS STATE OF WASHINGTON 47661 REGISTERED PROFESSIONAL ENGINEER

REUSE OF DRAWINGS
THIS DOCUMENT, AND THE IDEAS AND DESIGNS INCORPORATED HEREIN, AS AN INSTRUMENT OF PROFESSIONAL SERVICE, IS THE PROPERTY OF J-U-B ENGINEERS, Inc.

NO.	DESCRIPTION	BY	APR.	DATE
	REVISION			

BENTON COUNTY PUBLIC WORKS DEPT.
CID CANAL REALIGNMENT/CE 1619 CRP

PLAN & PROFILE STA. 9+87 TO STA. 13+50

FILE: 30-04-051_CID_C-201
JUB PROJ. # 30-04-051
DRAWN BY: STT
DESIGN BY: BBH
CHECKED BY: TAM
ONE INCH — AT FULL SIZE, IF NOT ONE INCH, SCALE ACCORDINGLY
LAST UPDATED: 10/4/2011

SHEET NUMBER:
2 OF 10

Plot Date:10/4/2011 1:05 PM Plotted By: Sara Torres
Date Created:4/2/2011 F:\PROJECT\30-04-051 - PIERT ROAD EXTENSION-01 DESIGN\CAD\SHEET\CID CANAL REALIGNMENT\30-04-051_CID_C-201.DWG

T8N, R30E, SEC.23

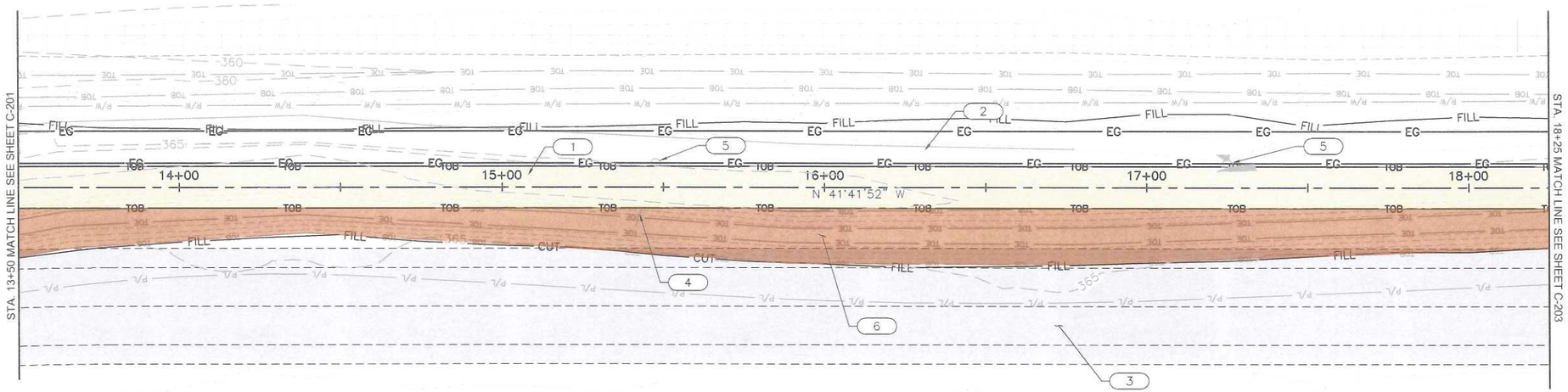

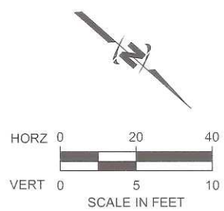

CONSTRUCTION NOTES:

1. EXISTING UTILITIES, PIPING SIZES, MATERIALS, LOCATIONS AND ELEVATIONS ARE SCHEMATICALLY SHOWN IN AN APPROXIMATE WAY ONLY AND MAY VARY FROM THAT SHOWN. INFORMATION WAS OBTAINED FROM THE SITE, INFORMATION OF RECORD, AND INFORMATION PROVIDED TO J-U-B ENGINEERS, INC. THE CONTRACTOR SHALL DETERMINE THE EXACT LOCATION OF ALL EXISTING UTILITIES BEFORE COMMENCING WORK AND AGREES TO BE FULLY RESPONSIBLE FOR ANY AND ALL DAMAGES WHICH MIGHT BE OCCASIONED BY FAILURE TO EXACTLY LOCATE AND PRESERVE ANY AND ALL UNDERGROUND UTILITIES. QUANTITIES SHOWN ARE FOR BIDDING PURPOSES ONLY. THE CONTRACTOR SHALL BE RESPONSIBLE FOR CORRECT LENGTHS AND QUANTITIES.
2. REMOVE ALL EXISTING PIPING TO BE ABANDONED WHEN ENCOUNTERED IN TRENCHES OR STRUCTURAL EXCAVATION PRIOR TO BACKFILLING. CAP OR PLUG WITH CONCRETE ALL PIPES, CONDUITS, OR OTHER OPENINGS WHICH ARE CUT OR OPENED DURING EXCAVATION.
3. PROVIDE DETAILED "AS-BUILT" RECORDS SHOWING LOCATION, DEPTH, SIZE AND MATERIAL TYPE OF ALL PIPING CONSTRUCTED OR ENCOUNTERED DURING WORK.
4. ANY CHANGES OR MODIFICATIONS TO THE PROJECT PLANS SHALL FIRST BE APPROVED BY THE ENGINEER.
5. ALL DISTURBED AREAS SHALL BE HYDRO-SEEDED AT THE COMPLETION OF THE PROJECT.
6. CONTRACTOR SHALL RESTORE EXISTING LANDSCAPING THAT IS DISTURBED DURING CONSTRUCTION ACTIVITIES.

KEYED NOTES:

1. CONCRETE LINED CANAL, ±475 L.F., SEE 6/8
2. ACCESS ROAD ±475 L.F., SEE 1/8
3. FUTURE PIERT ROAD BY OTHERS
4. REMOVE EXISTING 6" (±23 L.F.) CONCRETE PIPE
5. REMOVE 3' DIA. CONCRETE WEIR STRUCTURE (TYP. OF 2)
6. BACKFILL EXISTING CANAL. FILL MATERIAL SHALL BE PLACED IN UNIFORM HORIZONTAL LIFTS NO THICKER THAN 8-INCHES IN LOOSE MEASUREMENT. EACH LIFT SHALL BE COMPACTED TO A MINIMUM OF 95% OF MAX. DENSITY IN ACCORDANCE WITH SECTION 2-03.3(14)D

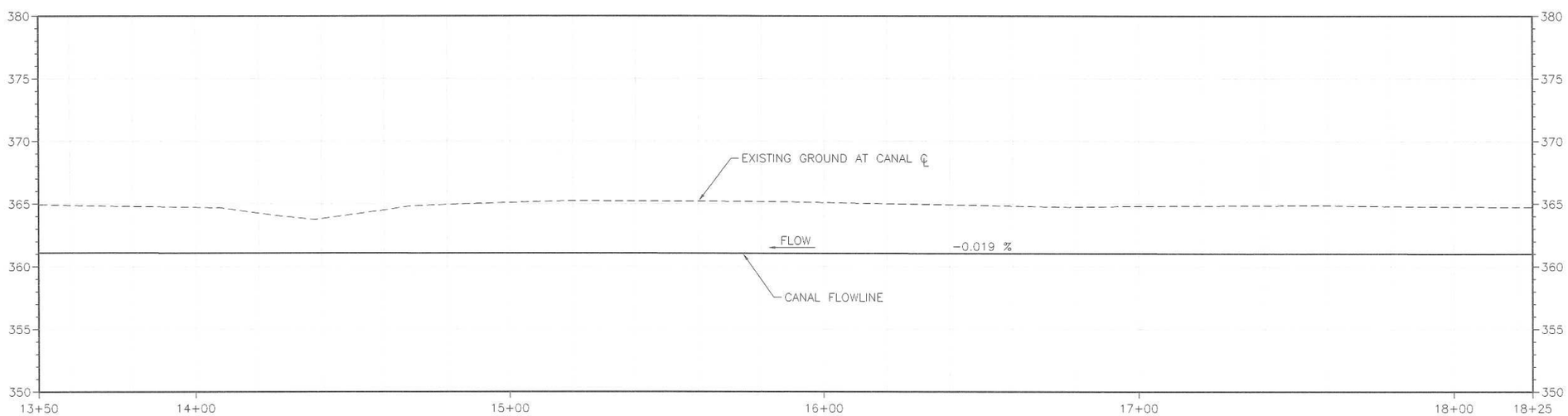

Know what's below. Call before you dig.

J-U-B ENGINEERS, INC.
J-U-B ENGINEERS, INC.
2810 W. Clearwater Ave.
Suite 201
Kennewick, WA 99336
Phone: 509.783.2144
Fax: 509.736.0790
www.jub.com

BENJAMIN BUREN HAYNES
STATE OF WASHINGTON
47661
REGISTERED
PROFESSIONAL ENGINEER
10-4-26

REUSE OF DRAWINGS
THIS DOCUMENT, AND THE IDEAS AND DESIGNS INCORPORATED HEREIN, AS AN INSTRUMENT OF PROFESSIONAL SERVICE, IS THE PROPERTY OF J-U-B ENGINEERS, Inc.

NO.	DESCRIPTION	BY	APR.	DATE
	REVISION			

BENTON COUNTY PUBLIC WORKS DEPT.
CID CANAL REALIGNMENT/CE 1619 CRP

PLAN & PROFILE STA. 13+50 TO STA. 18+25

FILE: 30-04-051_CID_C-202
JUB PROJ. # : 30-04-051
DRAWN BY: STT
DESIGN BY: BBH
CHECKED BY: TAM
ONE INCH
AT FULL SIZE, IF NOT ONE INCH, SCALE ACCORDINGLY
LAST UPDATED: 9/22/2011

SHEET NUMBER:
3 OF 10

Plot Date: 10-4-2011 1:09 PM Plotted By: Sara Toms
Date Created: 2-27-2011 P:\PROJECT\30-04-051_PIERT ROAD EXTENSION\01 DESIGN\CAD\SHEET\CID CANAL REALIGNMENT\30-04-051_CID_C-202.DWG

T8N, R30E, SEC.23

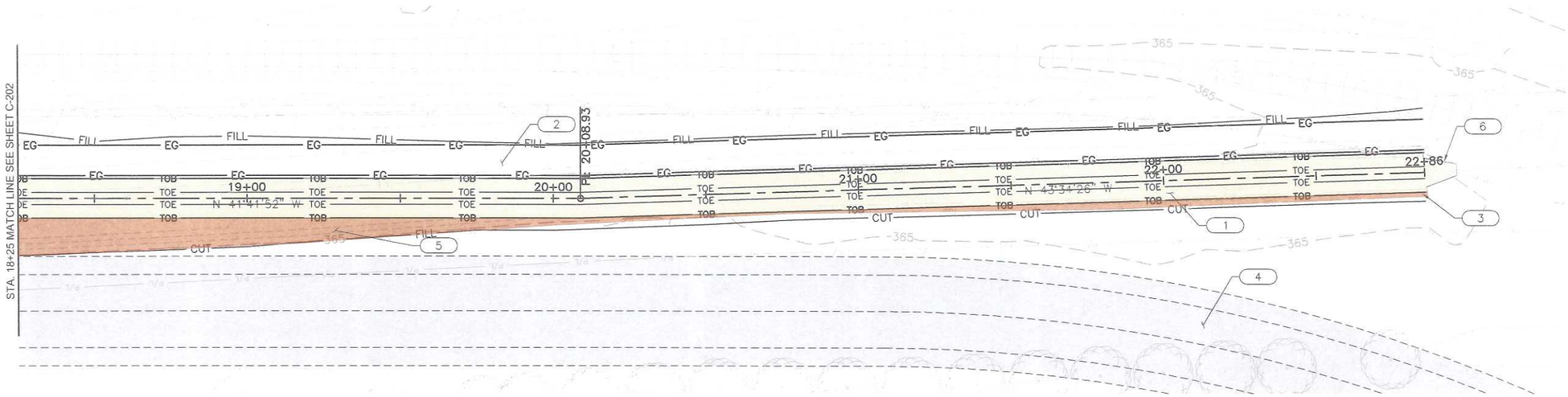

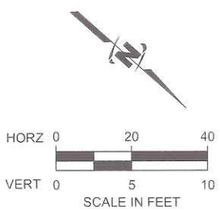

CONSTRUCTION NOTES:

1. EXISTING UTILITIES, PIPING SIZES, MATERIALS, LOCATIONS AND ELEVATIONS ARE SCHEMATICALLY SHOWN IN AN APPROXIMATE WAY ONLY AND MAY VARY FROM THAT SHOWN. INFORMATION WAS OBTAINED FROM THE SITE, INFORMATION OF RECORD, AND INFORMATION PROVIDED TO J-U-B ENGINEERS, INC. THE CONTRACTOR SHALL DETERMINE THE EXACT LOCATION OF ALL EXISTING UTILITIES BEFORE COMMENCING WORK AND AGREES TO BE FULLY RESPONSIBLE FOR ANY AND ALL DAMAGES WHICH MIGHT BE OCCASIONED BY FAILURE TO EXACTLY LOCATE AND PRESERVE ANY AND ALL UNDERGROUND UTILITIES. QUANTITIES SHOWN ARE FOR BIDDING PURPOSES ONLY. THE CONTRACTOR SHALL BE RESPONSIBLE FOR CORRECT LENGTHS AND QUANTITIES.
2. REMOVE ALL EXISTING PIPING TO BE ABANDONED WHEN ENCOUNTERED IN TRENCHES OR STRUCTURAL EXCAVATION PRIOR TO BACKFILLING. CAP OR PLUG WITH CONCRETE ALL PIPES, CONDUITS, OR OTHER OPENINGS WHICH ARE CUT OR OPENED DURING EXCAVATION.
3. PROVIDE DETAILED "AS-BUILT" RECORDS SHOWING LOCATION, DEPTH, SIZE AND MATERIAL TYPE OF ALL PIPING CONSTRUCTED OR ENCOUNTERED DURING WORK.
4. ANY CHANGES OR MODIFICATIONS TO THE PROJECT PLANS SHALL FIRST BE APPROVED BY THE ENGINEER.
5. ALL DISTURBED AREAS SHALL BE HYDRO-SEEDED AT THE COMPLETION OF THE PROJECT.
6. CONTRACTOR SHALL RESTORE EXISTING LANDSCAPING THAT IS DISTURBED DURING CONSTRUCTION ACTIVITIES.

KEYED NOTES:

1. CONCRETE LINED CANAL, ±461 L.F., SEE 6/8
2. ACCESS ROAD ±461 L.F., SEE 1/8
3. CONNECT TO EXISTING STRUCTURE WITH SMOOTH CONCRETE TRANSITION
4. FUTURE PIERT ROAD BY OTHERS
5. BACKFILL EXISTING CANAL. FILL MATERIAL SHALL BE PLACED IN HORIZONTAL LIFTS NO THICKER THAN 8-INCHES IN LOOSE MEASUREMENT. EACH LIFT SHALL BE COMPACTED TO A MINIMUM OF 95% OF MAX. DENSITY IN ACCORDANCE WITH SECTION 2-03.3(14)D
6. EXISTING CONCRETE TRANSITION. RETAIN AND PROTECT.

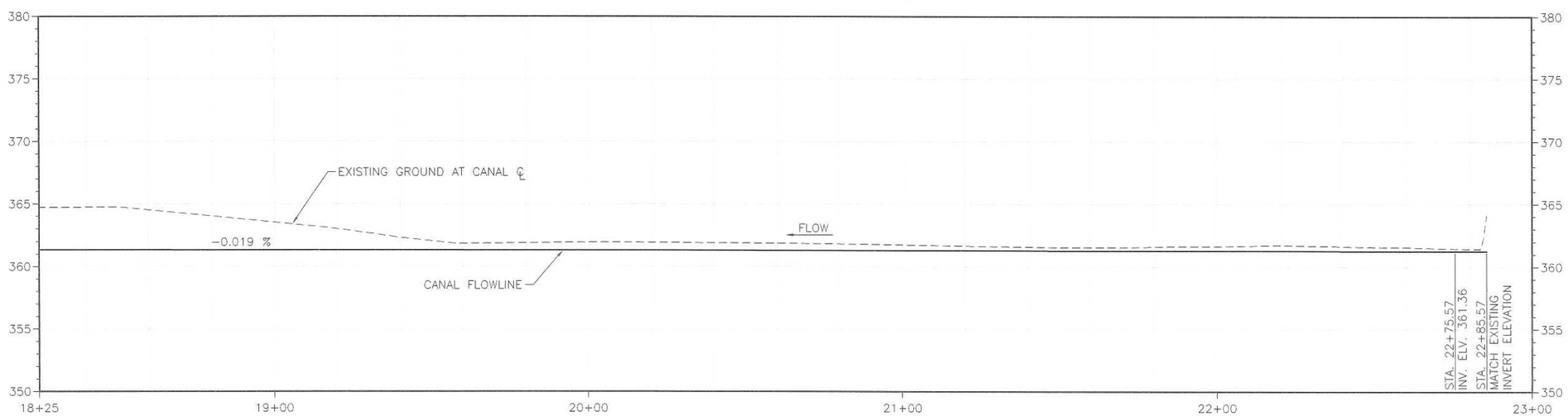

Know what's below. Call before you dig.

J-U-B ENGINEERS, INC.

J-U-B ENGINEERS, INC.
2810 W. Clearwater Ave.
Suite 201
Kennewick, WA 99336
Phone: 509.783.2144
Fax: 509.736.0790
www.jub.com

BENJAMIN BUREN HAYS
STATE OF WASHINGTON
47661
REGISTERED
PROFESSIONAL ENGINEER

REUSE OF DRAWINGS
THIS DOCUMENT, AND THE IDEAS AND DESIGNS INCORPORATED HEREIN, AS AN INSTRUMENT OF PROFESSIONAL SERVICE, IS THE PROPERTY OF J-U-B ENGINEERS, Inc.

NO.	DESCRIPTION	BY	APR	DATE
	REVISION			

BENTON COUNTY PUBLIC WORKS DEPT.
CID CANAL REALIGNMENT/CE 1619 CRP

PLAN & PROFILE STA. 18+25 TO STA. 22+86

FILE: 30-04-051_CID_C-203
JUB PROJ. #: 30-04-051
DRAWN BY: STT
DESIGN BY: BBH
CHECKED BY: TAM
ONE INCH
AT FULL SIZE, IF NOT ONE INCH, SCALE ACCORDINGLY
LAST UPDATED: 10/4/2011

SHEET NUMBER:
4 OF 10

Plot Date: 10/4/2011 1:06 PM Plotted By: Sara Torres
Date Created: 4/27/2011 F:\PROJECT\30-04-051 - PIERT ROAD EXTENSION\01 DESIGN\CAD\SHEET\CID CANAL REALIGNMENT\30-04-051 CID C-203.DWG

ALIGNMENT CURVE DATA

CURVE NO.	PI STA.	DEGREE	DELTA	LENGTH	RADIUS	TANGENT	CHORD BEARING
AR-1	20+16.19	163°42'08"	49°16'27"	30.10'	35.00'	16.05'	S 68°05'31" W
AR-2	21+33.52	163°42'08"	90°00'01"	54.98'	35.00'	35.00'	S 88°27'17" W
AR-3	22+93.13	28°38'52"	08°24'45"	29.37'	200.00'	14.71'	N 50°45'06" W

T8N, R30E, SEC.23

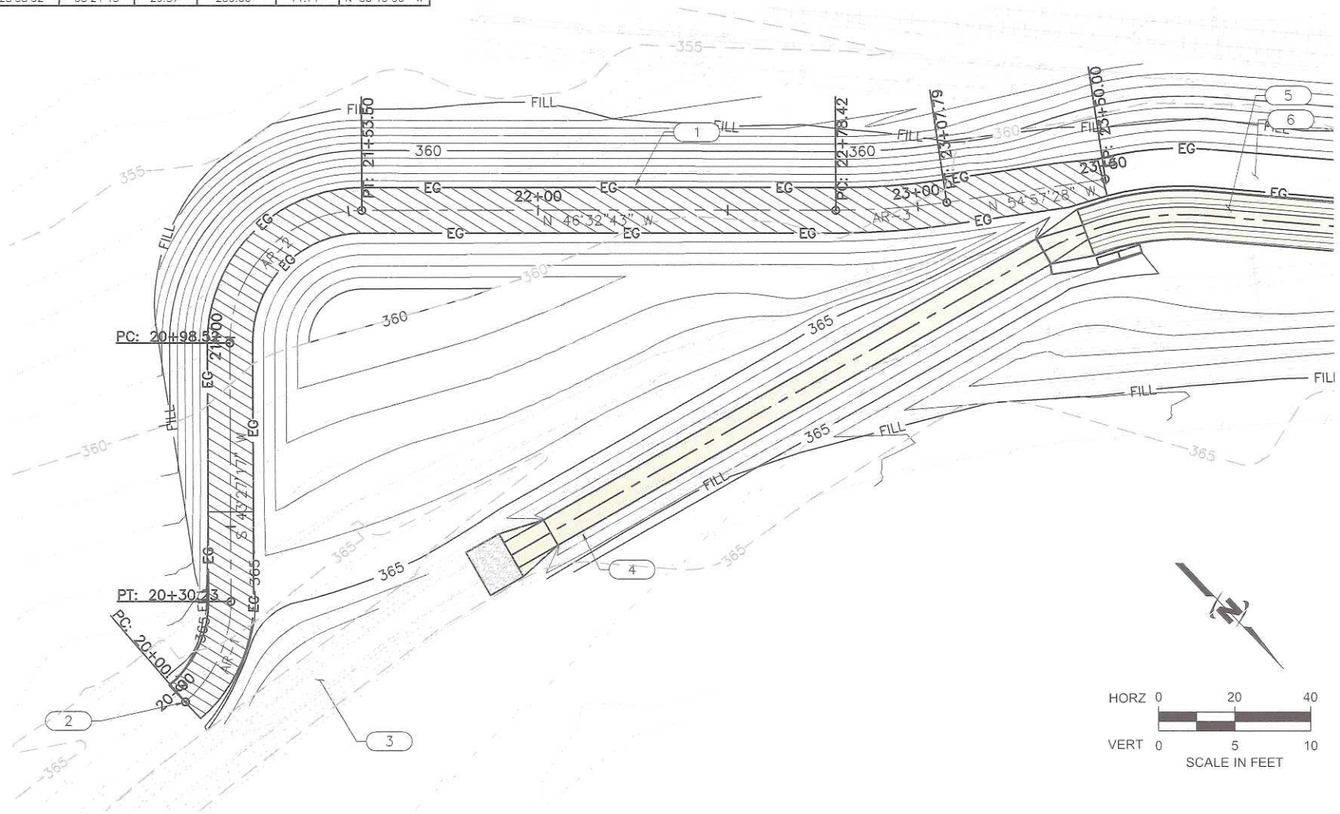

KEYED NOTES:

1. ROADWAY C ±350 L.F., SEE 2 / C-501
2. TIE IN ROADWAY C INTO EXISTING CANAL ROAD.
3. EXISTING CID CANAL
4. NEW BOX CULVERT, SEE SHEET C-201.
5. NEW CID CANAL, SEE SHEET C-201
6. ACCESS ROAD, SEE SHEET C-201

CONSTRUCTION NOTES:

1. EXISTING UTILITIES, PIPING SIZES, MATERIALS, LOCATIONS AND ELEVATIONS ARE SCHEMATICALLY SHOWN IN AN APPROXIMATE WAY ONLY AND MAY VARY FROM THAT SHOWN. INFORMATION WAS OBTAINED FROM THE SITE, INFORMATION OF RECORD, AND INFORMATION PROVIDED TO J-U-B ENGINEERS, INC. THE CONTRACTOR SHALL DETERMINE THE EXACT LOCATION OF ALL EXISTING UTILITIES BEFORE COMMENCING WORK AND AGREES TO BE FULLY RESPONSIBLE FOR ANY AND ALL DAMAGES WHICH MIGHT BE OCCASIONED BY FAILURE TO EXACTLY LOCATE AND PRESERVE ANY AND ALL UNDERGROUND UTILITIES. QUANTITIES SHOWN ARE FOR BIDDING PURPOSES ONLY. THE CONTRACTOR SHALL BE RESPONSIBLE FOR CORRECT LENGTHS AND QUANTITIES.
2. REMOVE ALL EXISTING PIPING TO BE ABANDONED WHEN ENCOUNTERED IN TRENCHES OR STRUCTURAL EXCAVATION PRIOR TO BACKFILLING. CAP OR PLUG WITH CONCRETE ALL PIPES, CONDUITS, OR OTHER OPENINGS WHICH ARE CUT OR OPENED DURING EXCAVATION.
3. PROVIDE DETAILED "AS-BUILT" RECORDS SHOWING LOCATION, DEPTH, SIZE AND MATERIAL TYPE OF ALL PIPING CONSTRUCTED OR ENCOUNTERED DURING WORK.
4. ANY CHANGES OR MODIFICATIONS TO THE PROJECT PLANS SHALL FIRST BE APPROVED BY THE ENGINEER.
5. ALL DISTURBED AREAS SHALL BE HYDRO-SEEDED AT THE COMPLETION OF THE PROJECT.
6. CONTRACTOR SHALL RESTORE EXISTING LANDSCAPING THAT IS DISTURBED DURING CONSTRUCTION ACTIVITIES.

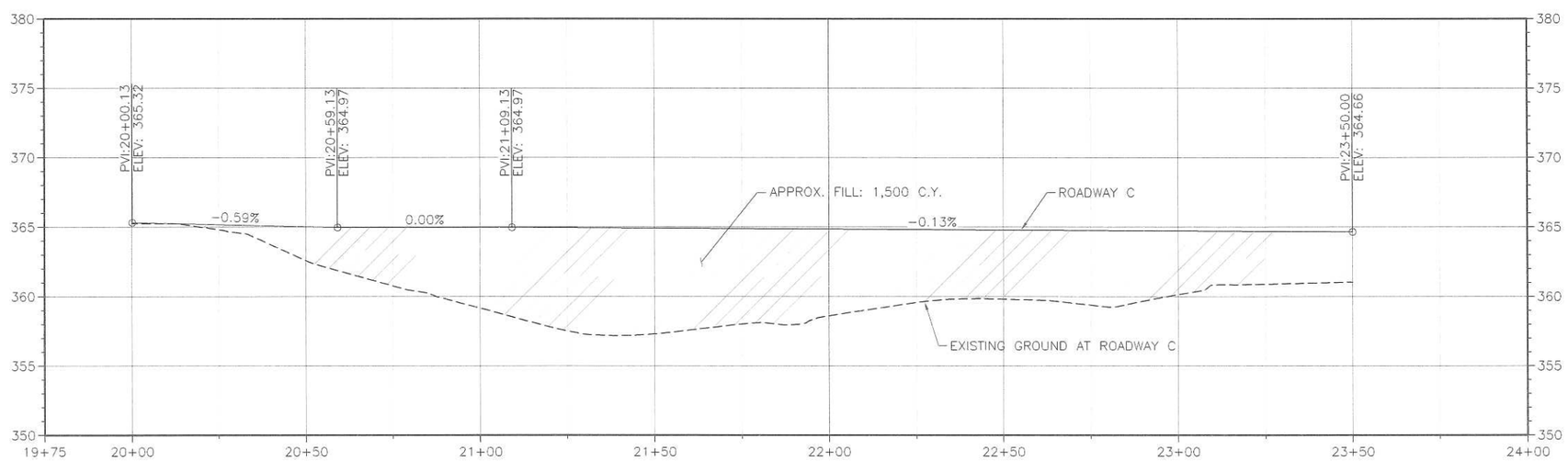

J-U-B ENGINEERS, INC.
J-U-B ENGINEERS, INC.
2810 W. Clearwater Ave.
Suite 201
Kennewick, WA 99336
Phone: 509.783.2144
Fax: 509.736.0790
www.jub.com

BENJAMIN BUREN HAYS
STATE OF WASHINGTON
47661
REGISTERED PROFESSIONAL ENGINEER
10-4-11

REUSE OF DRAWINGS
THIS DOCUMENT, AND THE IDEAS AND DESIGNS INCORPORATED HEREIN, AS AN INSTRUMENT OF PROFESSIONAL SERVICE, IS THE PROPERTY OF J-U-B ENGINEERS, Inc.

NO.	DESCRIPTION	BY	APR	DATE
	REVISION			

BENTON COUNTY PUBLIC WORKS DEPT.
CID CANAL REALIGNMENT/CE 1619 CRP

ROADWAY C

FILE: 30-04-051 CID C-204
JUB PROJ. #: 30-04-051
DRAWN BY: STT
DESIGN BY: BBH
CHECKED BY: TAM
ONE INCH
AT FULL SIZE, IF NOT ONE INCH, SCALE ACCORDINGLY
LAST UPDATED: 9/27/2011

SHEET NUMBER:
5 OF 10

811 Know what's below. Call before you dig.

Plot Date: 10/4/2011 1:06 PM Plotted by: Sara Torres
Date Created: 4/27/2011 F:\PROJECT\30-04-051 PIERT ROAD EXTENSION (#1 DESIGN)\CAD\SHEETS\CID CANAL REALIGNMENT\30-04-051 CID C-204.DWG

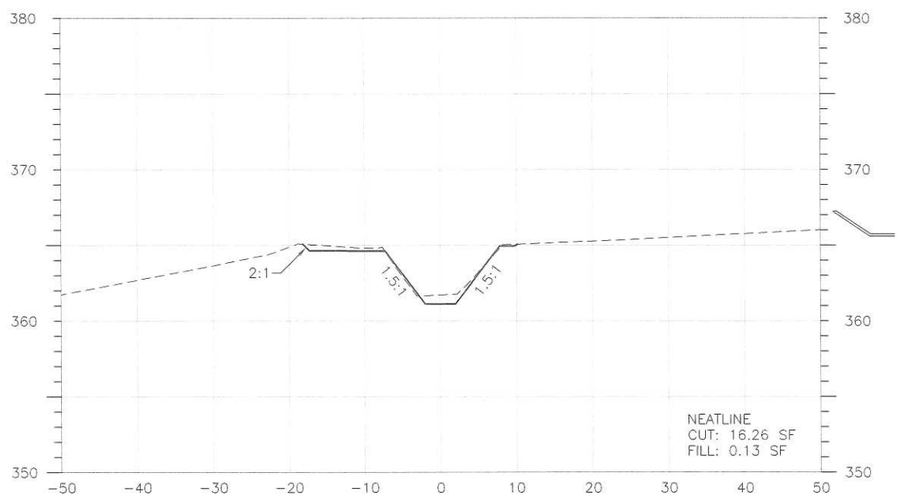

CROSS SECTION - STA. 10+00

HORZ 0 10 20
VERT 0 5 10
SCALE IN FEET

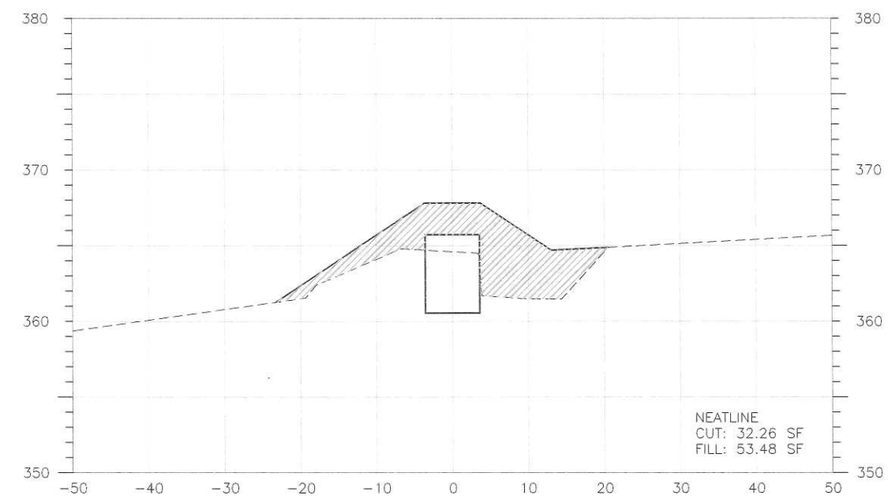

CROSS SECTION - STA. 11+00

HORZ 0 10 20
VERT 0 5 10
SCALE IN FEET

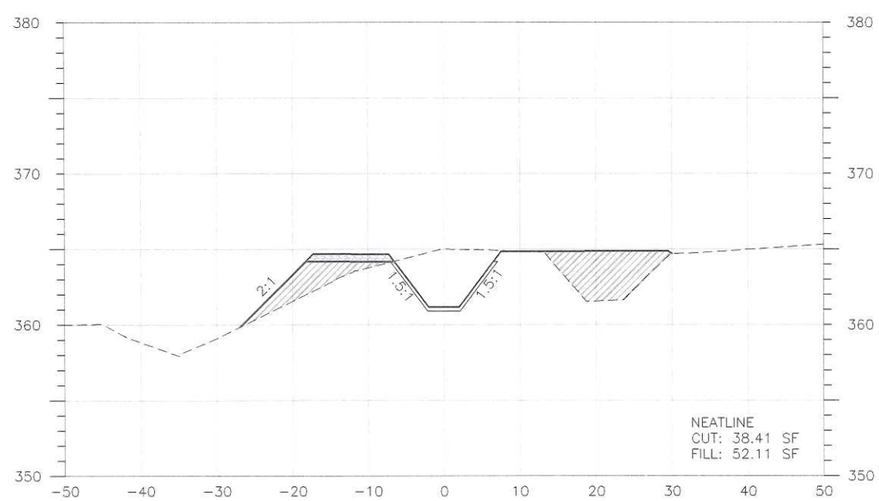

CROSS SECTION - STA. 13+00

HORZ 0 10 20
VERT 0 5 10
SCALE IN FEET

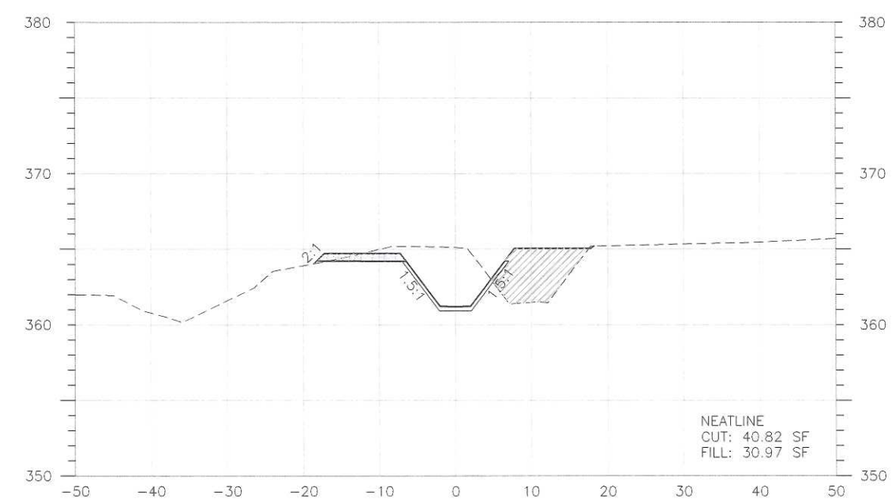

CROSS SECTION - STA. 15+00

HORZ 0 10 20
VERT 0 5 10
SCALE IN FEET

J-U-B ENGINEERS, INC.

J-U-B ENGINEERS, INC.
2810 W. Clearwater Ave.
Suite 201
Kennewick, WA 99336
Phone: 509.783.2144
Fax: 509.736.0790
www.jub.com

BENJAMIN BUREN HAWS
STATE OF WASHINGTON
47661
REGISTERED
PROFESSIONAL ENGINEER

REUSE OF DRAWINGS
THIS DOCUMENT, AND THE IDEAS AND DESIGNS INCORPORATED HEREIN, AS AN INSTRUMENT OF PROFESSIONAL SERVICE, IS THE PROPERTY OF J-U-B ENGINEERS, Inc.

NO.	DESCRIPTION	BY	APR	DATE
	REVISION			

BENTON COUNTY PUBLIC WORKS DEPT.
CID CANAL REALIGNMENT/CE 1619 CRP

CROSS SECTIONS STA. 9+87 TO STA. 15+00

FILE: 30-04-051_CID_C-301
JUB PROJ. # 30-04-051
DRAWN BY: STT
DESIGN BY: BBH
CHECKED BY: TAM
ONE INCH
AT FULL SIZE, IF NOT ONE INCH, SCALE ACCORDINGLY
LAST UPDATED: 9/14/2011

SHEET NUMBER:
6 OF 10

Plot Date: 10/4/2011 1:07 PM Plotted By: Sara Torres
Date Created: 4/27/2011 I:\PROJECT\30-04-051 PIERT ROAD EXTENSION\-01 DESIGN\CAD\SHEET\CID CANAL REALIGNMENT\30-04-051_CID_C-301.DWG

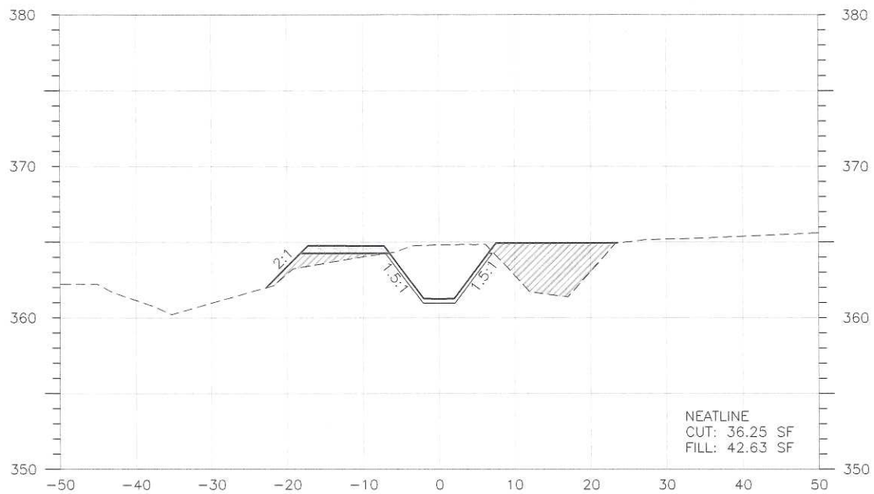

HORZ 0 10 20
VERT 0 5 10
SCALE IN FEET

CROSS SECTION - STA. 17+00

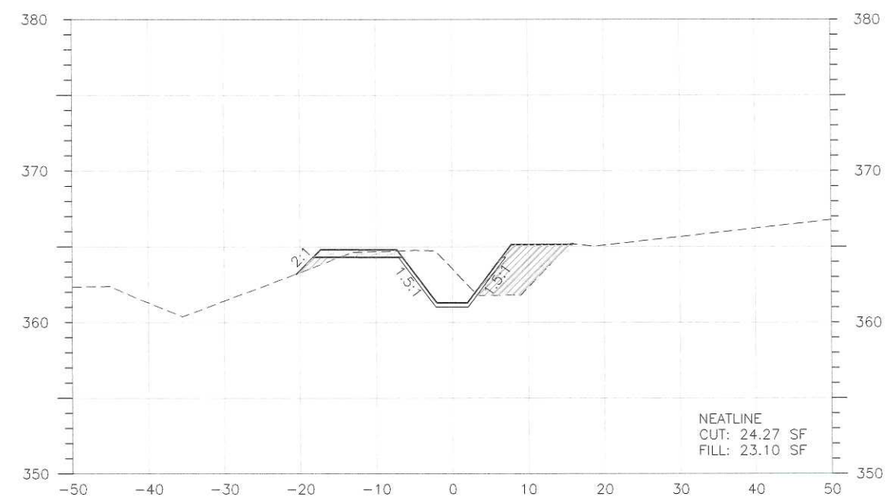

HORZ 0 10 20
VERT 0 5 10
SCALE IN FEET

CROSS SECTION - STA. 19+00

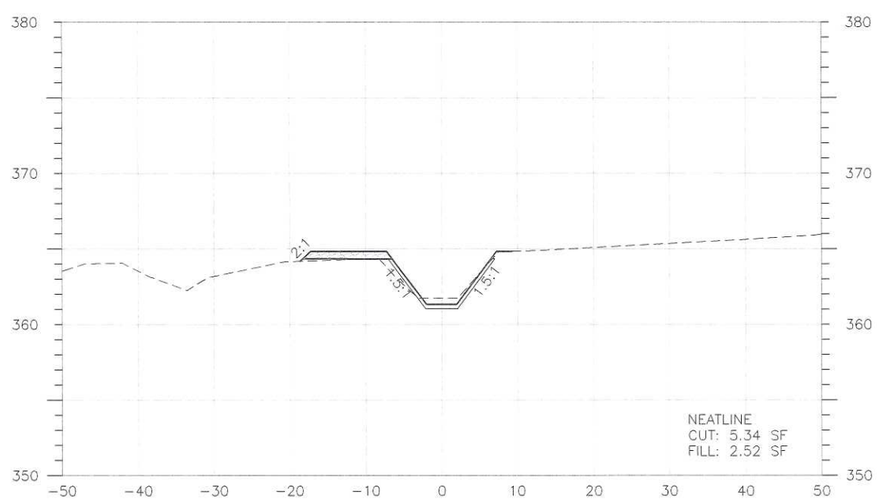

HORZ 0 10 20
VERT 0 5 10
SCALE IN FEET

CROSS SECTION - STA. 21+00

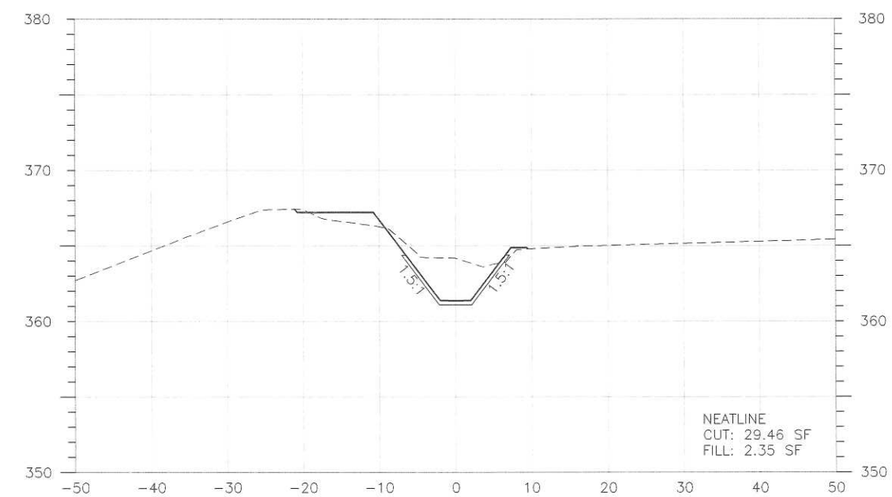

HORZ 0 10 20
VERT 0 5 10
SCALE IN FEET

CROSS SECTION - STA. 22+86

J-U-B ENGINEERS, INC.
2810 W. Clearwater Ave.
Suite 201
Kennewick, WA 99336
Phone: 509.783.2144
Fax: 509.736.0790
www.jub.com

STATE OF WASHINGTON
BENJAMIN BUREN HAYS
47661
REGISTERED
PROFESSIONAL ENGINEER

REUSE OF DRAWINGS:
THIS DOCUMENT, AND THE IDEAS AND DESIGNS INCORPORATED HEREIN, AS AN INSTRUMENT OF PROFESSIONAL SERVICE, IS THE PROPERTY OF J-U-B ENGINEERS, Inc.

NO.	DESCRIPTION	BY	APR.	DATE
	REVISION			

BENTON COUNTY PUBLIC WORKS DEPT.
CID CANAL REALIGNMENT/CE 1619 CRP

CROSS SECTION STA. 17+00 TO STA. 22+86

FILE: 30-04-051 CID C-302
JUB PROJ. # : 30-04-051
DRAWN BY: STT
DESIGN BY: BBH
CHECKED BY: TAM
ONE INCH
AT FULL SIZE, IF NOT ONE INCH, SCALE ACCORDINGLY
LAST UPDATED: 10/4/2011

SHEET NUMBER:
7 OF 10

Plot Date: 10-4-2011 1:08 PM Plotted by: Sara Torres
Date Created: 4-27-2011 F:\PROJECTS\30-04-051 PEART ROAD EXTENSION\01 DESIGN\CAD\SHEETS\CID CANAL REALIGNMENT\30-04-051 CID C-302.DWG

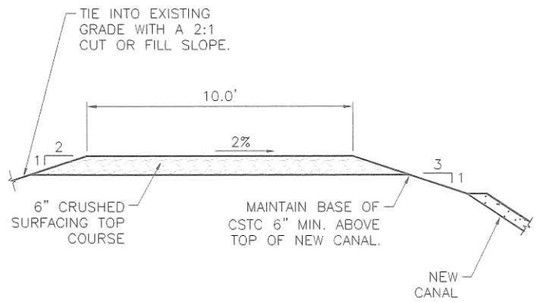

1 ACCESS ROAD
SCALE: NTS

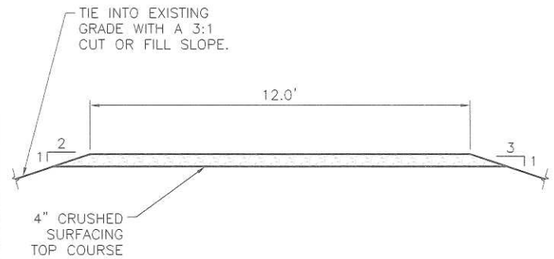

2 ROADWAY C
SCALE: NTS

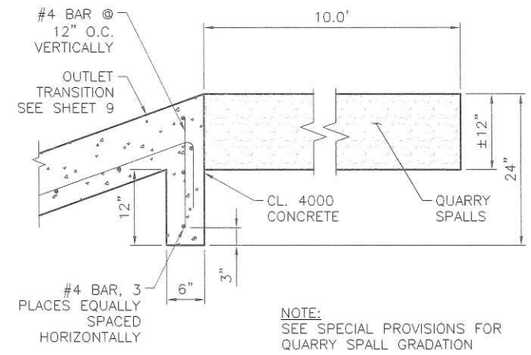

NOTE:
SEE SPECIAL PROVISIONS FOR QUARRY SPALL GRADATION

3 CUTOFF WALL
SCALE: NTS

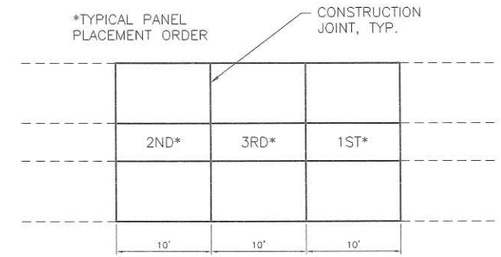

NOTES:
1. PLACE CONCRETE CANAL LINING IN ALTERNATING 10' WIDE PANELS THE LENGTH OF THE CANAL.
2. CONCRETE SHALL BE CONSOLIDATED AND SCREED TO PROVIDE A SMOOTH UNIFORM SURFACE
3. CONCRETE SHALL HAVE STEEL TROWEL SMOOTH FINISH
4. ALL CONCRETE SHALL BE CL. 4000

4 CONCRETE PANEL PLACEMENT
SCALE: NTS

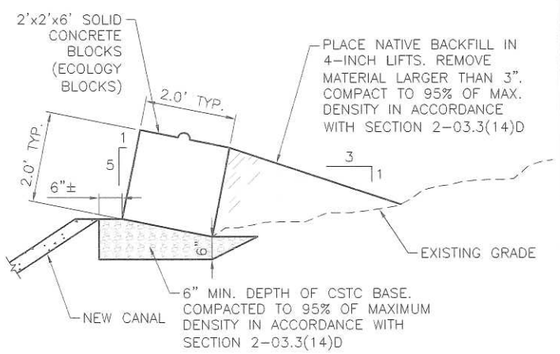

5 GRAVITY BLOCK WALL
SCALE: NTS

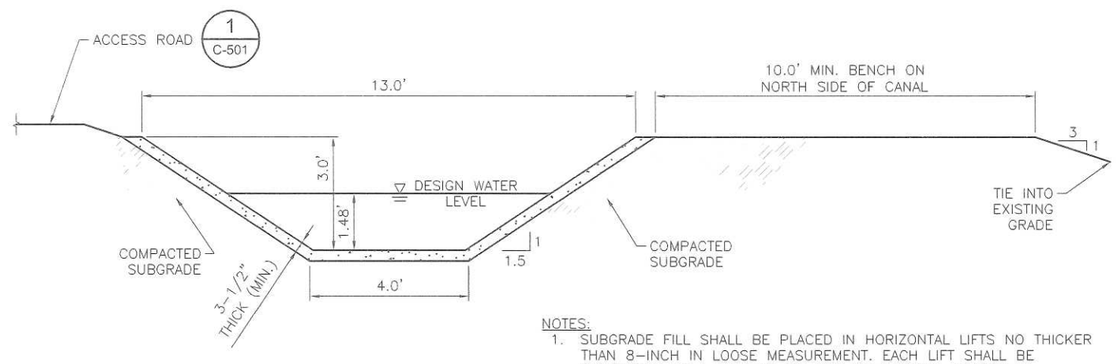

NOTES:
1. SUBGRADE FILL SHALL BE PLACED IN HORIZONTAL LIFTS NO THICKER THAN 8-INCH IN LOOSE MEASUREMENT. EACH LIFT SHALL BE COMPACTED TO A MINIMUM OF 95% OF MAXIMUM DENSITY IN ACCORDANCE WITH SECTION 2-03.3(14)D
2. DESIGN WATER LEVER BASED ON A FLOWRATE OF 14.5 cfs, ENERGY SLOPE OF 0.0002 ft/ft, AND MANNING N VALUE OF 0.013.
3. PLACE CONCRETE CANAL LINING IN ALTERNATING 10' WIDE PANELS THE WIDTH OF THE CANAL. SEE CONCRETE PANEL PLACEMENT DETAIL THIS SHEET.

6 CONCRETE CANAL LINED SECTION
SCALE: NTS

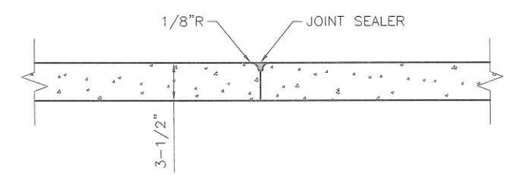

NOTE:
1. SCORE ALL CONSTRUCTION JOINTS 1/2" DEEP.
2. CONSTRUCTION JOINTS SHALL BE PLACED AT 10' SPACING AND AT TOE OF SLOPES.
3. JOINT SEALANT SHALL BE SIKA-FLEX WITH PRIMER OR APPROVED EQUAL.
4. SEALANT SHALL EXTEND TO 6" BELOW TOP OF CANAL.

7 CONSTRUCTION JOINT DETAIL
SCALE: NTS

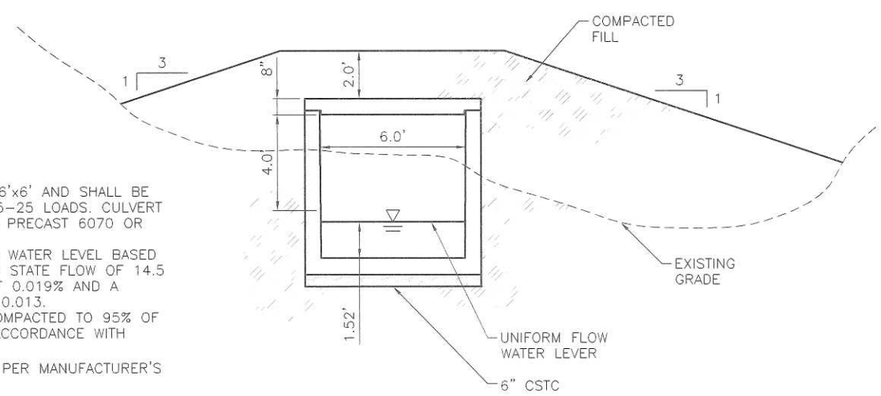

NOTES:
1. BOX CULVERT I.D. OF 6'x6' AND SHALL BE TRAFFIC RATED FOR H5-25 LOADS. CULVERT SHALL BE OLD CASTLE PRECAST 6070 OR APPROVED EQUAL.
2. UNIFORM FLOW DESIGN WATER LEVEL BASED ON A UNIFORM STEADY STATE FLOW OF 14.5 cfs, ENERGY SLOPE OF 0.019% AND A MANNING N VALUE OF 0.013.
3. BACKFILL SHALL BE COMPACTED TO 95% OF MAXIMUM DENSITY IN ACCORDANCE WITH SECTION 2-03.3(14)D
4. INSTALL BOX CULVERT PER MANUFACTURER'S RECOMMENDATIONS.

8 BOX CULVERT SECTION
SCALE: NTS

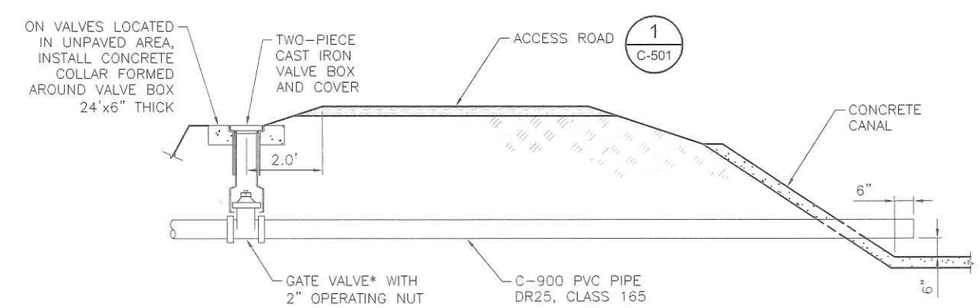

*GATE VALVES SHALL HAVE RESILIENT SEATS AND MEET THE REQUIREMENTS OF AWWA C509

9 SERVICE DETAIL
SCALE: NTS

J-U-B ENGINEERS, INC.
J-U-B ENGINEERS, INC.
2810 W. Clearwater Ave.
Suite 201
Kennewick, WA 99336
Phone: 509.783.2144
Fax: 509.736.0790
www.jub.com

BENJAMIN BUREN HAYES
STATE OF WASHINGTON
47661
REGISTERED
PROFESSIONAL ENGINEER

REUSE OF DRAWINGS:
THIS DOCUMENT, AND THE IDEAS AND DESIGNS INCORPORATED HEREIN, AS AN INSTRUMENT OF PROFESSIONAL SERVICE, IS THE PROPERTY OF J-U-B ENGINEERS, Inc.

NO.	DESCRIPTION	BY	APR.	DATE
	REVISION			

BENTON COUNTY PUBLIC WORKS DEPT.
CID CANAL REALIGNMENT/CE 1619 CRP

DETAIL SHEET

FILE: 30-04-051_CID_C-501
JUB PROJ. # : 30-04-051
DRAWN BY: STT
DESIGN BY: BBH
CHECKED BY: TAM
ONE INCH
AT FULL SIZE, IF NOT ONE INCH, SCALE ACCORDINGLY
LAST UPDATED: 10/4/2011

SHEET NUMBER:
8 OF 10

Plot Date: 10/4/2011 1:06 PM Plotted By: Sara Torres
Date Created: 4/27/2011 F:\PROJECT\30-04-051 - PRIEST ROAD EXTENSION\01 DESIGN\CAD\SHEET\CID CANAL REALIGNMENT\30-04-051 CID C-501.DWG

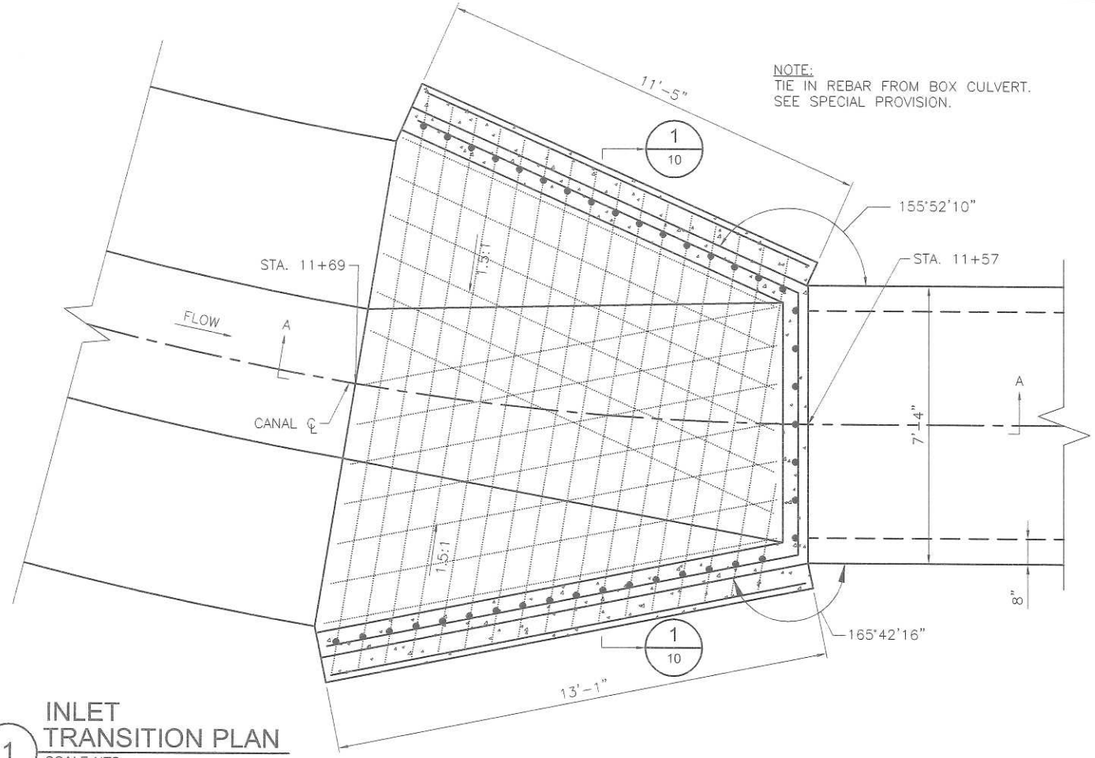

1 INLET TRANSITION PLAN
SCALE:NTS

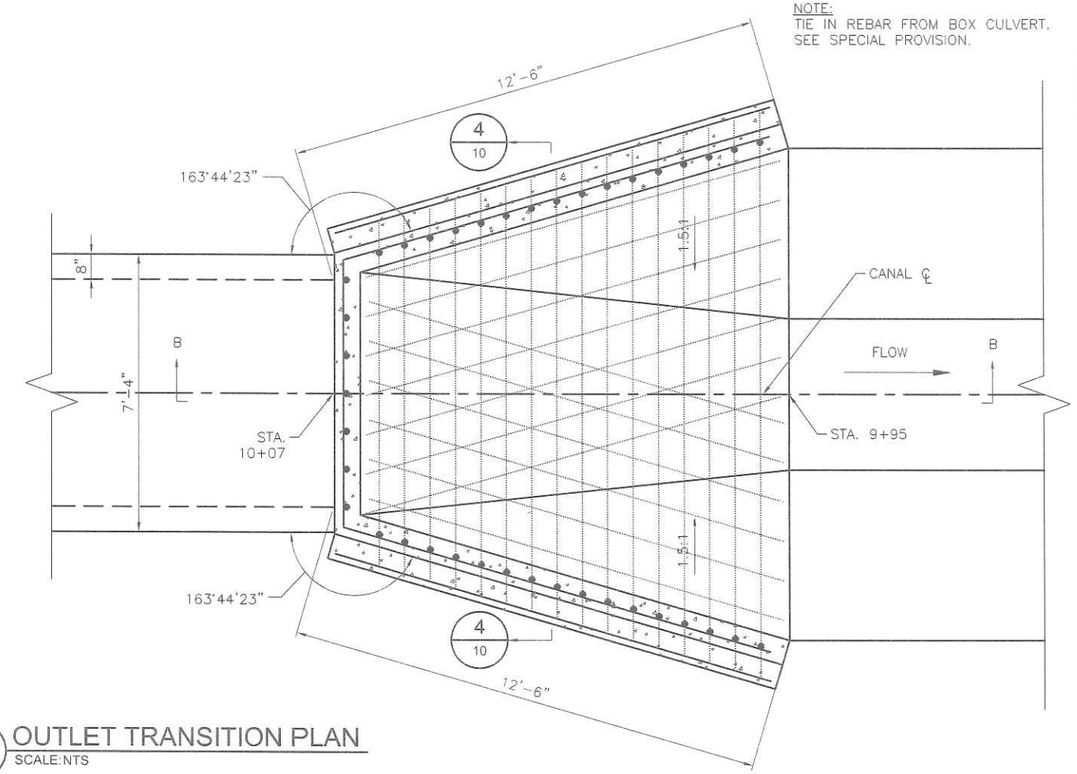

2 OUTLET TRANSITION PLAN
SCALE:NTS

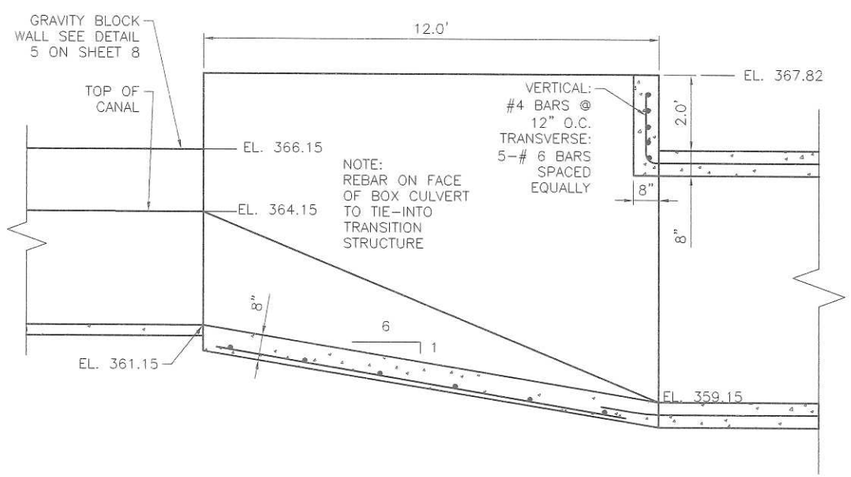

3 SECTION A-A (INLET)
SCALE:NTS

NOTE:
ALL CONCRETE TO BE CL. 4000.

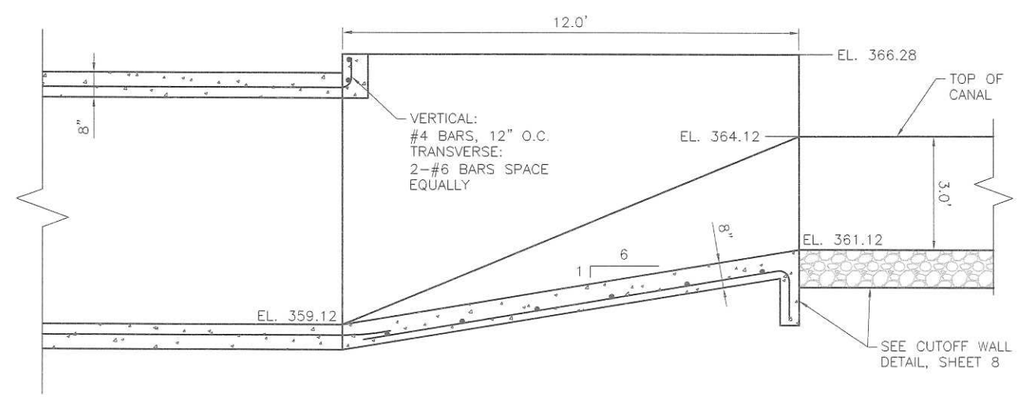

4 SECTION B-B (OUTLET)
SCALE:NTS

J-U-B ENGINEERS, INC.
J-U-B ENGINEERS, INC.
2810 W. Clearwater Ave.
Suite 201
Kennewick, WA 99336
Phone: 509.783.2144
Fax: 509.736.0790
www.jub.com

ANTHONY S. VADER
STATE OF WASHINGTON
47036
REGISTERED
PROFESSIONAL ENGINEER
10/5/11

REUSE OF DRAWINGS
THIS DOCUMENT, AND THE IDEAS AND DESIGNS INCORPORATED HEREIN, AS AN INSTRUMENT OF PROFESSIONAL SERVICE, IS THE PROPERTY OF J-U-B ENGINEERS, Inc.

NO.	DESCRIPTION	BY	APR.	DATE

REVISION

BENTON COUNTY PUBLIC WORKS DEPT.
CID CANAL REALIGNMENT/CE 1619 CRP

BOX CULVERT TRANSITION DETAILS

FILE 30-04-051_CID_C-502
JUB PROJ. # 30-04-051
DRAWN BY: STT
DESIGN BY: BBH
CHECKED BY: TAM
ONE INCH
AT FULL SIZE, IF NOT ONE INCH, SCALE ACCORDINGLY
LAST UPDATED: 10/5/2011

SHEET NUMBER:
9 OF 10

Plot Date: 10/5/2011 10:47 AM Printed By: Michael Harvey
Date Created: 9/12/2011 \\KWNFILES\PUBLIC\PROJECT\30-04-051 PIERT ROAD EXTENSION\01 DESIGN\CAD\SHEETS\CID CANAL REALIGNMENT\30-04-051_CID_C-502.DWG

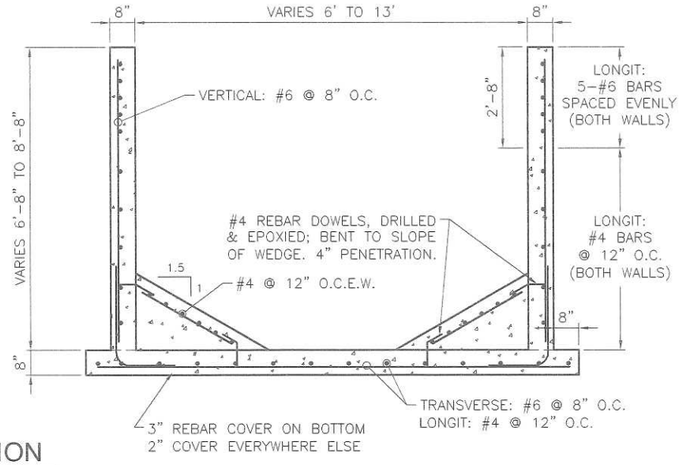

1 INLET SECTION

SCALE: NTS

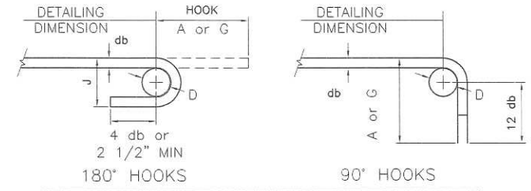

BAR SIZE	D	180° HOOKS A or G	180° HOOKS J	90° HOOKS A or G
#3	2 1/4"	5"	3"	6"
#4	3"	6"	4"	8"
#5	3 3/4"	7"	5"	10"
#6	4 1/2"	8"	6"	12"
#7	5 1/4"	10"	7"	1'-2"
#8	6"	11"	8"	1'-4"

NOTES:
db = NOMINAL BAR DIAMETER
D = FINISHED INSIDE BEND DIAMETER
MINIMUM D = 6 db FOR #3 TO #8 BARS
MINIMUM D = 8 db FOR #9 TO #11 BARS
MINIMUM D = 10 db FOR #14 AND #18 BARS
TYPICAL MINIMUM END HOOKS, ALL GRADES OF STEEL

2 TYPICAL REBAR HOOK DETAILS

SCALE: NTS

TYP LAP SPLICE LENGTHS IN INCHES, PER ACI 318									
BAR SIZE	LAP CLASS	f'c = 3,000 psi		f'c = 4,000 psi		f'c = 5,000 psi		f'c = 6,000 psi	
		CAT 1	CAT 2	CAT 1	CAT 2	CAT 1	CAT 2	CAT 1	CAT 2
#4	A	22	33	19	28	17	25	15	23
	B	28	43	25	37	22	33	20	30
#5	A	27	41	24	36	21	32	19	29
	B	36	53	31	46	28	41	25	38
#6	A	33	49	28	43	25	38	23	35
	B	43	64	37	55	33	50	30	45
#7	A	48	72	42	62	37	56	34	51
	B	62	93	54	81	48	72	44	66
#8	A	55	82	47	71	42	64	39	58
	B	71	106	61	92	55	83	50	76
#9	A	62	92	53	80	48	72	44	65
	B	80	120	69	104	62	93	57	85

NOTES:
1. TABLE FOR GRADE 60 REINFORCING STEEL BARS
2. ALL LAP SPLICES SHALL BE CLASS B, UNLESS NOTED OTHERWISE
3. CATEGORY 1: CLEAR COVER >= db AND CLEAR SPACING >= db AND STIRRUPS OR TIES THROUGHOUT Ld ARE PROVIDED
4. CATEGORY 1: CLEAR COVER >= db AND CLEAR SPACING >= 2db
5. CATEGORY 2: CLEAR COVER < db OR CLEAR SPACING < 2db
6. FOR TOP BARS MULTIPLY LAP LENGTH LISTED BY 1.30, TOP BARS ARE HORIZONTAL BARS WITH MORE THAN 12" OF CONCRETE CAST BELOW THE BARS

3 TYPICAL LAP SPLICE LENGTHS

SCALE: NTS

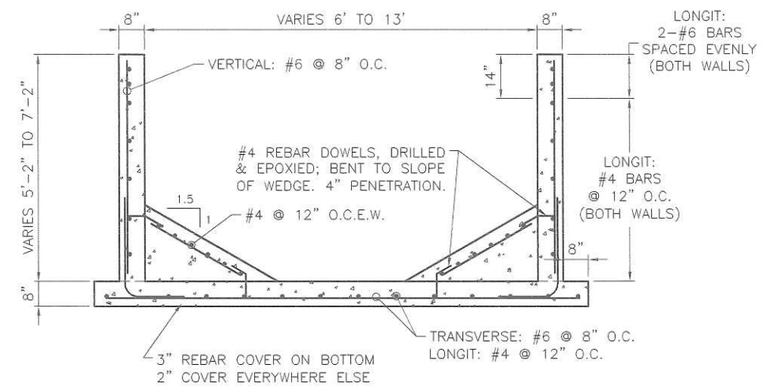

4 OUTLET SECTION

SCALE: NTS

J-U-B ENGINEERS, INC.
J-U-B ENGINEERS, INC.
2810 W. Clearwater Ave.
Suite 201
Kennewick, WA 99336
Phone: 509.783.2144
Fax: 509.736.0790
www.jub.com

ANTHONY S. VADER
STATE OF WASHINGTON
17036
REGISTERED
PROFESSIONAL ENGINEER
10/5/11

REUSE OF DRAWINGS:
THIS DOCUMENT AND THE IDEAS AND DESIGNS INCORPORATED HEREIN, AS AN INSTRUMENT OF PROFESSIONAL SERVICE, IS THE PROPERTY OF J-U-B ENGINEERS, Inc.

NO.	DESCRIPTION	BY	APR	DATE
	REVISION			

BENTON COUNTY PUBLIC WORKS DEPT.
CID CANAL REALIGNMENT/CE 1619 CRP

BOX CULVERT TRANSITION DETAILS

FILE: 30-04-051_CID_C-503
JUB PROJ. # : 30-04-051
DRAWN BY: STT
DESIGN BY: BBH
CHECKED BY: TAM
ONE INCH
AT FULL SIZE, IF NOT ONE INCH, SCALE ACCORDINGLY
LAST UPDATED: 10/5/2011

SHEET NUMBER:
10 OF 10

Plot Date: 10/5/2011 10:15 AM Plotted By: Michael Verney
Date Created: 9/12/2011 W:\FILES\PUBLIC\PROJECT\30-04-051 PILERT ROAD EXTENSION-01 DESIGN\CAD\SHEET\CID CANAL REALIGNMENT\30-04-051_CID_C-503.DWG